REPORT

ON THE

AGRICULTURE OF THE DISTRICT OF LOHARDAGA.

BENGAL SECRETARIAT LIBRARY.

BY

B. C. BASU,

Assistant to the Director of the Department of Land Records and Agriculture, Bengal.

Calcutta:

PRINTED AT THE BENGAL SECRETARIAT PRESS.

1891.

PART I.

SUDDER SUBDIVISION.

winds amongst boulders of rock, or up earthy slopes covered with forest, until 20 or 30 feet from the summit is reached; here a precipitous rock, the edge of a horizontal stratum, bars progress except through some fissure, not seen at first view. This horizontal stratum of trap rock forms a true contour or level line, being visible like a collar on every side of the *pát*. It in fact gives the *pát* its form; were it not that it continues to resist the action of rainfall, these *páts* would long ago have had their upper soil washed away, and would have put on the form of peaks and ridges common to ordinary hills."

Of the various tracts mentioned above, the plateau of Chutiá Nágpur and the Five Parganás are the only ones deserving special treatment. The fiscal division of Tori shares its physical characters with the adjoining district of Házáribágh on the east and the subdivision of Palámau on the west. Biru and the southern portion of Bassiá are a tangled mass of hills, and, unless for the splendid but yet inaccessible forests which they support, do not exhibit any special character worthy of mention. I accordingly proceed to treat in detail of the distinguishing physical aspects of only the two most important natural divisions of the subdivision, viz., the plateau of Chutiá Nágpur and the Five Parganás.

Physical characters of the Chutiá Nágpur plateau.—The entire surface of the plateau is thrown up into long undulations, and is dotted over at more or less wide intervals by low gneissic hills. The intervening hollows are dug out into innumerable small terraces which, rising one above another, have the appearance of a series of steps rising up the slopes of the ridges. These terraces are covered with rice, while the high lands on the tops and sides of the ridges are left to the cultivation of high land rice, various millets and oilseeds. To the east of the meridian of Pálkot, the undulations are broad and gentle, and the quantity of terraced land proportionately great. Here the plateau has the look of a well-cultivated plain, thickly interspersed with villages. In this region little forest is to be found at the present day, excepting at the edges of the plateau which are too steep for cultivation. The sides of the numerous hills which rise above the plateau, the tops of such ridges as are too rocky to be cultivated with profit, and the banks of rivers and streams which are usually too much broken to admit of cultivation, are also left to forest, which has everywhere degenerated into scrub on account of the ruthless destruction of their timber. The eastern portion of the plateau has been so perfectly denuded of forest that, standing on the top of a ridge, one can see a clean and broad expanse of conntry, with nothing to obstruct the view for miles around, except the numerous mango-topes which mark out the village sites. As a distinguishing appellation, the eastern part of the plateau is known to the people as tánr-ráj or 'kingdom of plain country,' to distinguish it from the country to the west of the meridian of Pálkot, which, together with Biru and the Tributary States of Chutiá Nágpur, is known as ban-ráj or 'kingdom of forests.' In the western part of the plateau the undulations become more and more pronounced, and the hills more numerous, as we go further west. The proportion of land available for rice cultivation becomes limited, and the villages scattered at increasingly wider intervals in the midst of unbroken forest. The central parganás of Khukrá and Doisá may serve as specimens of the tánr-ráj, and those of Bárwe and Pálkot of the ban-ráj.

The surface of the plateau is intersected by innumerable streams and small rivulets which fall under one or other of the river systems of the country. Most of these get dried up during the dry season, and remain more or less flooded during the rains. I know of no country of which the drainage is so perfect as that of Chutiá Nágpur. This will be better understood by saying that through its enormous extent of 7,804 square miles, not a single lake or marsh is to be met with. The soil of the uplands, being too loose to retain sufficient moisture for a long time after the rains are over, can support little or no vegetation during the dry months when the open parts of the country assume a somewhat arid appearance. But directly after the advent of the monsoon, vegetation pushes up with renewed activity, and the face of the country becomes quickly covered up with a fresh vesture of green crops.

Physical characters of the Five Parganás.—The Five Parganás (*Pánch Parganá*) is so called from its including the five fiscal divisions of Sillí, Ráhe, Bárándá, Bundu, and Támár. It is overlooked on the west by the main

tableland with which it shares many of its physical characters. Like the plateau of Chutiá Nágpur, its surface is thrown up into long waves, and interspersed with numerous hills. The central portion of the tract, including the parganás of Ráhe, Bárándá, and the greater portion of Bundu and Sillí has the look of a well-cultivated plain, while the greater portion of Támár to the south of the Karkarí and the northern half of Sillí are extremely hilly and overrun with dense jungle. The Five Parganás has a more fertile appearance than the plateau of Chutiá Nágpur. This arises from its being well watered by the Subarnarekhá and its affluents, the Kokro, the Kánchí and the Karkarí. All these rise in the plateau of Chutiá Nágpur, and falling abruptly over the edge of the plateau, have their speed quickly arrested by the level nature of the country. A great deal of alluvial land has been thus formed on the banks of these rivers on which such valuable crops as sugarcane and tobacco are usually grown.

SECTION 2.—*Geology.*

The plateaus of Chutiá Nágpur and Házáribágh appear to form a continuation of the Sátpurá range; but there is no real connexion between these elevations and the Sátpurá chain; the former are formed of gneissic rocks, and the latter are of aqueous origin, and form part of the Gondwáná formations. The gneiss of Chutiá Nágpur forms the Eastern or Bengal subdivision of the three great areas of Peninsular gneiss viz., the Bundelkhand, the Eastern or Bengal, and the Arvali areas. Mr. Mallet gives the following tabular constituents of the gneiss of Singrauli in Mirzápur to which the Chutiá Nágpur and Házáribágh gneiss are closely related (*vide* page 19, Part I of the Geology of India, by Medlicott and Blanford):—

1. Minerals as constituents of the gneiss :—

   Quartz; orthoclose, oligoclose; muscovite; biotite; hornblende, epidote.

2. Occurring in beds in the gneiss :—Limestone; dolomite, corundum; magnetite; quartz as quartzite and quartz-schist; hornblende as hornblende-rock; tremolite and jade; mica as mica schist; epidote.

3. Occurring in veins in the gneiss :—
   - *a.* Quartz in veins and reef-quartz.
   - *b.* In pegmatite veins (as constituents): orthoclose, oligoclose; mica; quartz.
   - *c.* In epidotic veins: epidote; quartz.

4. Accidental minerals in the gneiss :—

   Magnetite; ilmenite; schorl; garnet; stilbite (?)

5. Accidental minerals occurring in the subordinate beds (2) of the gneiss :—
   - *a.* In the limestone: magnetite; pyrite; haematite; serpentine; chrysolite; ; phlogopite (?); wollastonite.
   - *b.* In corundun bed: schorl; euphyllite; diaspore.
   - *c.* In jade bed (associated with corundum): corundum; rutile (?); schorl; euphyllite.

6. Accidental minerals occurring in the veins, &c., in the gneiss :—
   - *a.* In the quartz veins: micaceous iron; tremolite; augite; epidote; schorl; muscovite.
   - *b.* In the quartz-reefs: galena; cerusite.
   - *c.* In the pegmatite veins: schorl; garnet.

To this list may be added the minerals found by Mr. Mallet in Házáribágh, which is only a continuation of the Chutiá Nágpur plateau: lepidolite; tourmaline; beryl; apatite; lucopyrite; tinstone. Zircon is also said to occur.

The gneiss of Chutiá Nágpur appears to be rather granitoid than schistose, resembling granite in almost every respect excepting its slightly foliated appearance. It is also more or less freely interbedded with micaceous, hornblendic, and silicious schists; and frequenty broken in by veins of quartz and pegmatite granite. In the Five Parganás which adjoin the area of transition rocks of Singbhum, there occurs a peculiar form of gneiss which has been described as dome-gneiss "from its weathering into great hemispherical or ellipsoidol masses of bare rock, the only divisional planes being concentric

layers of exfoliation." These dome-shaped hills of gneiss are a pretty common feature in the landscape of the Five Parganás.

On the main plateau of Chutiá Nágpur, the gneissic hills which are almost always isolated from one another, and do not show any definite axis of elevation, are often covered with a coating of huge boulders, giving the hills the appearance of a gigantic heap of road metal. Some of these boulders have been dislocated and carried to considerable distances from their originial situations, suggesting the action of a powerful agency. The remarkable manner in which some of these boulders are poised one over another, and occasionally perched on the crests or sides of low hills, seeming as if a breath of wind will tumble them over, suggests the existence of glaciers in recent geological times. I may cite here the instance of the remarkable natural pillar at Pálkot which consists of three huge boulders of gneiss supported one over another by narrow surfaces of contact.

The highest of the three levels of Chutiá Nágpur is represented by a few isolated small plateaus in the extreme north-west bordering on Palámau and the Tributary States of Sargujá and Jashpur. These small plateaus or *páts*, as they are locally called, are uniformly covered with trap rocks, which were evidently continuous with the extensive trap deposits of the Deccan. These *páts* have a uniform elevation of about 3,600 feet above the sea level, and are on the same level with the plateau of Amarkantak, between which and the *páts* intervenes a low area of metamorphic and sedimentary formations.

The surface of the Chutiá Nágpur tableland is covered in many places with beds of laterite gravel. The beds are always superficial, and seldom attain a thickness of more than a few feet. They occupy the crests and sides of the ridges in which the whole country is thrown up. The laterite of Chutiá Nágpur and the adjoining districts is not a massive rock, but is a mere sandy or gravelly deposit highly impregnated with iron peroxide; and may be accepted as a type of low-level laterite. It has the appearance of brick-dust, and shows evidence of having been of volcanic origin. It is possible that the laterite gravels of Chutiá Nágpur Proper are but broken fragments of beds of high-level laterite which once occupied the tops of the gneissic hills; these were washed down by rain and streams to lower levels at which they became recemented. The origin of laterite is still, however, an open question.

Another kind of ferruginous gravelly deposit is found under the same circumstances and in similar situations as laterite. It resembles the latter in having a large proportion of iron, but differs altogether from it in its minerological character. This gravel is nothing but the detritus of the gneissic rocks which it overlies, and contains sharp angular fragments of gneiss and its mineral ingredients. Such gravelly laterite-like deposits have been known as lithomarge.

SECTION 3.—*Hill system.*

The existence of numerous isolated hills all over the subdivision has been mentioned in the section on the physical aspects of the country. These are usually named after the villages situated at their feet.

These hills have usually an east and west direction; but in the more hilly parts of the plateau like Biru, Bárwe and Támár, the hills are so curiously blended with each other that it is difficult to assign to them any definite line of elevation. I am unable to group the hills of the subdivision into systems with any scientific precision, but I have attempted below to classify them according to the places at which they are met with:—

(1) The isolated hills scattered over the plateau of Chutiá Nágpur These are very numerous in the western part of the plateau.

(2) The hills of Biru, Bassiá and the Five Parganás rising out of the lowest of the three levels of the subdivision.

(3) A more or less continuous line of low hills fringing the plateau of Chutiá Nágpur.

None of the hills of the subdivision attain to any considerable elevation above the level of the country. The highest hills are Sáru (3,615 feet) in parganá Kásmár, and Baragái or Moráng Buru, north of Ránchí (3,445 feet above the sea-level).

SECTION 4.—*The River system.*

The Chutiá Nágpur subdivision is intersected by numerous rivers and streams. None of them are navigable, and serve any useful purpose beyond carrying away the drainage of the country. They are more or less full during the rainy season; some of them dwindle into insignificant streams in hot weather, but the great majority get entirely dried up at that time.

The river systems of Chutiá Nágpur Proper are the following:—

(1) *The Subarnarekhá river system.*—The Subarnarekhá, with its various tributaries, drains the eastern portion of the subdivision. The watershed between the Subarnarekhá and the affluents of the Bráhmaní is a long ridge of high land, running from south-east to north-west, crossing the Lohárdagá road about 8 miles from Ránchí. The northern edge of the plateau, again, forms the watershed between the Subarnarekhá on the south and the Dámodar (here called Deo Nad) on the north. The Subarnarekhá rises 10 miles south-west of Ránchí, and flows towards the north-east, leaving the main plateau in a picturesque waterfall, called Hundrughágh. From this point it forms the boundary with Házáribágh, its course being eastwards to the triple boundary junction with Mánbhum. Hence it bears southwards, and is again the boundary line until Singbhum district is reached, after a course of 100 miles.

The main confluents of the Subarnarekhá are the Kokro, the Kánchí and the Karkarí, which all rise in the plateau of Chutiá Nágpur, and, after a more or less abrupt fall, traverse the Five Parganás on their way to join the Subarnarekhá. The Kánchí has a course of 55 miles, and the Karkarí of 78 miles. The sands of the Karkarí, and indeed of the Subarnarekhá and many of its feeders also, are auriferous. Small quantities of gold are annually obtained by washing the sands of the Karkarí and of a small stream in the Sonápet Valley in Támár.

Little or no alluvial soil is found on the banks of the Subarnarekhá. Alluvial soils have, however, been abundantly formed in the Five Parganás by its confluents—the Kokro, the Kánchí and the Karkarí—and are held in high esteem for the cultivation of many valuable crops.

(2) *The Bráhmaní river system.*—The Bráhmaní river of Orissa is formed by the confluence of two rivers, the Koel and the Sunkh, both of which rise in Chutiá Nágpur Proper; and after an independent course, the one of 185 miles and the other of 120 miles, join one another in the Tributary State of Gángpur.

The Koel (called often the South Koel, to distinguish it from another river of the same name which flows towards the north) drains the greater part of Chutiá Nágpur Proper. Rising a short distance to the west of Ránchí, it follows a circuitous course southward until it meets the Sunkh in Gángpur; and the united stream, under the name of the Bráhmaní, enters the sea on the north-east of Cuttack. The principal feeder of the Koel is the Káro, called also the north Káro, to distinguish it from another tributary of the same name in Singbhum.

The Sunkh, with its feeders, none of which are of any importance, drains the south-western portion of the subdivision. It rises among the hills of Bárwe in the west of the subdivision, and after pursuing a more or less southerly course, meets the Koel in Gángpur.

(3) *The Dámodar.*—The Dámodar, under the name of Deo Nad, rises in parganá Tori, below the plateau of Chutiá Nágpur. Here it is an insignificant stream, and fordable at all seasons, excepting after a heavy rainfall when the river soon gets flooded, but is as quickly drained off after the rain has ceased. This peculiarity is common to most of the rivers and streams of a hilly country like Chutiá Nágpur Proper.

(4) *The North Koel.*—Almost the whole of the Chutiá Nágpur subdivision lies outside the limits of the Gangetic basin. A small portion of the north and north-west of the subdivision is however drained by the Dámodar and the North Koel, which latter ultimately joins the Són, a tributary of the Ganges, in the north of Palámau.

The watershed between the North Koel on the north and the South Koel and the Sunkh on the south lies among the hills of Bárwe and Kásmár in the extreme north-west of the subdivision. The only important feeder of the

North Koel in Chutiá Nágpur is the Aurangá, which rises in parganá Tori. The history of the North Koel and the Aurangá properly belongs to Palámau, and is therefore now omitted.

Changes in the course of rivers.—The banks of the rivers are more or less rocky, and do not admit of changes in the same way as those of rivers in the plains. The existing channels must have been worked out by slow denudation, long before the occupation of the country by man. There are consequently no changes in the courses of rivers to record.

Lakes and Marshes.—There are no natural lakes and marshes in the subdivision.

CHAPTER II.

THE AGRICULTURAL POPULATION, THEIR CHARACTER AND CONDITION.

SECTION 1.—*Castes engaged in Agricultural pursuits.*

The Census Report of 1881 does not give the numerical strength of each caste engaged in agricultural pursuits. In Chutiá Nágpur Proper, all castes, high or low, depend more or less on agriculture for their livelihood. Certain high castes, like the Bráhmans and the Rájputs, do not, indeed, cultivate land with their own hands, but hire others to do the work for them. Many of the Hindu castes, again, who have distinctive professions of their own derive the greater portion of their income from the cultivation of land. It is rarely the case that any one confines himself exclusively to his own caste profession. Leaving aside the class of agricultural labourers, almost everybody has a few bighas of land which he cultivates on his own account. It may be therefore said with perfect truth that, with the exception of an infinitesimal minority, who temporarily sojourn in the country either for service or for trade, the numerical strength of any race or caste in the subdivision is a true index to the share it takes in its agriculture. In this view, I give below a table showing the number and percentage of each of the three important religious divisions of the people inhabiting each tháná of the subdivision :—

Table showing the Population in each Tháná according to Religion.

	Name of Police Circle.	HINDUS.		MAHOMEDANS.		KOLS.*		Total of population.	REMARKS.
		Number.	Percentage.	Number.	Percentage.	Number.	Percentage.		
1	Ránchí ...	59,942	42·5	12,700	9·0	67,953	48·5	140,595	
2	Sillí ...	50,500	74·0	621	1·5	17,214	24·5	68,335	
3	Támár ...	42,363	45·0	400	...	52,933	55·0	95,696	
4	Kárrá ...	15,938	23 5	1,712	3	50,338	73·5	67,988	
5	Mándár ...	21,534	39·0	3,418	5	31,268	66 0	56,220	
6	Khuntí ...	29,463	28·0	606	1	74,071	71·0	104,140	
7	Bálumat ...	47,801	72·0	2,849	4·5	15,603	23·5	66,253	
8	Cháinpur ...	16,407	31 0	533	2·0	34,140	67·0	51,080	
9	Toto ...	22,651	26·0	2,180	2 5	64,247	71·5	89,078	
10	Lohárdagá ...	36,270	30·0	7,148	6 0	78,605	64·0	122,023	
11	Pálkot ..	45,274	42·0	1,142	1 0	62,303	57·0	108,719	
12	Kochedegá ...	28,455	43·0	434	...	37,172	57·0	66,061	
13	Bassiá ...	42,686	48·0	564	1·0	44,984	51·0	88,234	
	Total ...	459,284	41·0	34,307	3·0	630,831	56·0	1,124,422	

* Kols include Kol Christians and 367 others in the whole subdivision.

The Hindus.—It will appear from the above table that the Hindus form a little above two-fifths of the entire population. They exceed the aboriginals in only two out of the 13 police circles of the subdivision, one of which (Sillí) adjoins the district of Mánbhum in the east, and the other (Bálumat) borders on Palámau and Házáribágh in the north. The actual number of pure Hindus should be, however, much less, as at the last census a large number of Mundá Kols, and the whole bulk of the semi-Hinduised aboriginals were returned

as Hindus. I give below a list of the important Hindu castes, and of the Hinduised and semi-Hinduised aboriginal castes found in the subdivision. Besides those mentioned, there are a good many minor castes, but their number is too small to deserve separate mention in a report of this kind.

Hindu Castes.

Name of caste.	Caste profession.	Name of caste.	Caste profession.
1. Bráhmans ...	Priests.	13. Káhárs ...	Domestic servants.
2. Káyasts ...	Writers.	14. Burhis ...	Carpenters.
3. Khandáits ...	Soldiers.	15. Lohárs ...	Blacksmiths.
4. Rájputs ...		16. Kaserás ...	Braziers.
5. Baráiks ...		17. Kumbhárs ...	Potters.
6. Bánias ...	Traders and money and grain lenders.	18. Láheris ...	Lac-workers.
		19. Sonárs ...	Goldsmiths.
7. Áhirs ...	Cowherds.	20. Sunris ...	Distillers.
8. Kaibartas or Keots	Fishermen.	21. Telis ...	Oilmen.
9. Koeris ...	Cultivators and market gardeners.	22. Tántis ...	Weavers.
		23. Chik-Baráiks ...	
10. Kurmis ...	Cultivators.	24. Hálwáis ...	Sweetmeat-makers.
11. Sáraks ...	Ditto.	25. Deswális ...	Cultivators.
12. Dhobis ...	Washermen.		

Hinduised and semi-Hinduised Aboriginal Castes.

1. Goráits ...	Watchmen and musicians.	7. Bhogtás ...	Cultivators.
2. Máhális ...	Basket-makers.	8. Jhorás ...	Ditto and servants.
3. Turís ...	Basket-makers and fishermen.	9. Bhuiyás ...	Palki-bearers and syces.
4. Doms ...			
5. Rautiás ...	Soldiers and cultivators.	10. Dosádhs ...	Watchmen and servants.
6. Ghásis ...	Musicians, fishermen, and grass-cutters.	11. Nágásiás ...	Cultivators.
		12. Kherwás ...	Ditto.

Most of the Hindu castes have distinctive caste professions of their own. I have, however, seldom found a man who exclusively confines himself to his own profession. The oilman and the potter, the cowherd and the shepherd, the barber and the washerman, have each a few bighas of land, which he cultivates either with his own hands or by means of hired labour, at the same time that he carries on his own vocation. The exclusively agricultural castes are few. The Koeris and the Kurmis among the pure Hindu castes, and the Bhogtás, the Bhuiyás and the Rautiás among the Hinduised aboriginals, have no other calling besides agriculture.

Most of the pure-caste Hindus of the subdivision claim to be *Magháyás*, that is, descendants of persons who immigrated into the country from the Behar district of Gayá. In the Five Parganás, the Hindus are of Bengali descent, and still speak the Bengali language; while in the south-western parganás of Bassiá and Biru the Hindus are of Ooriya origin, and still retain the language and manners of Orissa.

The Hinduised and semi-Hinduised castes are the products of the slow but steady process of Hindu conversion which has been going on in the country from remote times. Some of the castes, like the Rautiás, have been assimilated into Hindu society, and their aboriginal identity completely lost; while others, like the Ghásis, the Bhuiyás and the Goráits, are little removed in their habits and manners from the aboriginals among whom they live. The gradual assimilation of aboriginal tribes into Hindu society is most prominently observed in the eastern and the southern parganás, which are mainly inhabited by the Mundáris. The Mundá and Mánki landlords of these parts disclaim any social connection with their fellow Mundáris, and, pretending to be Rájputs, follow in every respect the dogmas of the Hindu faith.

Mahomedans—Form a very small proportion of the population of Chutiá Nágpur Proper. This is due to the fact that at no period of its history the country was actually subject to the Mahomedan rule. The original Mahomedans of the country are Jollahars, or weavers by caste, but in recent times a small number of other Mahomedan sects from Behar have established themselves in the capacity of landlords, mahájans and cultivators.

The aboriginal tribes.—The plateau of Chutiá Nágpur, and in fact the whole of the subdivision, was at one time the exclusive habitat of various aboriginal

races, who had sought shelter in its fastnesses from the powerful Aryan race inhabiting the surrounding plains. Here, too, they were not free from the encroachments of Aryan invaders, by whom they were largely supplanted in the past and are still being superseded at the present day. Their strength was further diminished by a considerable portion having embraced the Hindu faith, and being now included among the Hindus. With all this, the aboriginal tribes still exceed by far the number of Hindus and Mahomedans put together.

A complete list of the various aboriginal tribes of the subdivision will be found in page 251 of the Statistical Account of Bengal, volume XVI. Their origin, manners, and social customs are treated in detail in pages 255 to 300. I refrain from reproducing the names and descriptions of the aboriginal tribes, with the exception of only three out of them, viz. the Mundás or Mundáris, the Uráons, and the Kháriás. These tribes are spoken of as Kols, although the term is indefinitely applied to Uráons in some parts and to the Mundáris in other parts of the country. Taking the whole of the subdivision, it may be said that the Uráons and the Mundáris are equal in point of numerical strength, while each of these is considerably in excess of the Kháriás. The Uráons predominate in the central parganás; the Mundáris in the eastern and southern parganás of Sirí, Sonpur and Belsián; the Kháriás are found in the largest numbers in the south-western parganás of Bassiá, Biru and Pálkot. The Mundáris and the Kháriás are closely allied to each other, being members of the great Kolarian race which once inhabited the Gangetic plain; and the Uráons are of Dravidian origin. For further particulars of their origin, language, manners and social customs, I beg to refer to pages 263—296 of volume XVI of the Statistical Account of Bengal.

These three tribes have long lived in close association with each other; but the language of each tribe remains yet intact, and the marriage and other ceremonies of each have their own distinctive features. But in their dress, mode of living, and external manners, there is but little difference by which the one tribe can be readily distinguished from the others. The Kols (by which name I will henceforth speak of all these three tribes) are hereditary cultivators and know no other profession.

Christians.—In the table given above I have included the Christians among the Kols for this reason, that they are almost invariably recruited from the aboriginal tribes. The following statement shows the numerical strength of the Christian population in each police circle of the subdivision:—

Statement showing the number of Christians in each Police Circle.

	Police Circle.	Number.	Percentage on total population.	Remarks.
1	Ránchí	2,264	1·6	
2	Sillí	53	.....	
3	Támár	2,320	2·4	
4	Kárrá ...	2,163	3·2	
5	Mándár	1,231	2·2	
6	Khuntí	18,525	18·0	
7	Bálumat	.....	.....	
8	Cháinpur	.....	.....	
9	Toto	137	...	
10	Lohárdagá	980	0 8	
11	Pálkot	1,744	1·6	
12	Kochedegá	.....	.....	
13	Bassiá	6,846	7·7	
	Total ...	36,263	3·2	

This statement is compiled from the Report of the Census of 1881, volume III and therefore represents the numerical strength of Christianity more than seven years ago. Within the last five years the Christian movement has gained incredible strength through the exertions of the newly-established Roman

Catholic Mission of Ránchí. The actual number of Christians at the present day is, I believe, more than double the number in 1881. The largest number of conversions has taken place in Sirí, Sonpur, Belsián and other southern parganás within the jurisdiction of the police circle of Khuntí. It is not uncommon to find in many villages the entire Kol population converted to the Christian faith.

Relative importance of each caste.—I have mentioned above the names and caste professions of all the important Hindu castes and aboriginal tribes of the subdivision. Table III of the Census Report of 1881 gives the number of each caste and tribe for the entire district, and does not therefore serve our purpose. The following statement, borrowed from Mr. Slack's Settlement Report of the Chutiá Nágpur estate, will however convey an approximate idea of the share which each of the many castes and tribes takes in the cultivation of land in 348 villages scattered all over the subdivision.

Statement showing each Caste and Tribe, its Number, and Area of Land held, etc.

Religion.	Serial No.	Caste.	Rank in point of area held.	Number of cultivating families.	Area of land held.	Average holding per family.	Remarks.
		Castes cultivating more than 1 per cent. of cultivated area.			Acres.	Acres.	
Hindus ...	1	Áhirs	3	792	7,753	9·7	
	2	Kurmis	5	928	6,785	7·3	
	3	Telis	7	590	5,522	9·7	
	4	Rájputs	8	533	5,213	9·3	
	5	Baráiks	11	378	2,873	7·5	
	6	Bániyás	12	375	2,754	7·3	
	7	Bráhmans	15	269	1,777	7·1	
	8	Sunris	16	158	1,650	10·4	
	9	Kumhárs	17	210	1,330	6·3	
	10	Koeris	19	244	1,150	4·7	
Hinduised aboriginals.	11	Bhogtás	6	725	5,757	7·9	
	12	Rautiyás	10	259	3,626	14·0	
	13	Kherwárs	13	312	1,890	6·0	
	14	Lohárs	14	455	1,837	4·0	
Mahomedans ...	15	Mussulmans	9	824	4,865	5·9	
Aboriginal tribes	16	Uráons	1	7,760	74,980	9·6	
	17	Mundáris	2	2,431	18,727	7·7	
	18	Kháriás	4	421	7,230	17·1	
	19	Christian Kols	18	136	1,332	9·7	
		Total ...	...	17,789	156,750	9·0	
	20 to 62	Total of 43 minor castes cultivating each less than 1 per cent. of cultivated area	...	1,840	8,853	4·8	
		Grand total of all castes and tribes	...	19,629	165,603	8·4	

Turning now to the caste statement, we find that the Uráons and the Mundáris form together a little more than half the total number of cultivators, holding between them 57 per cent. of the total area under cultivation. The aboriginal tribes, whose names have been separately mentioned in the preceding statement, together with those included in the 43 castes and tribes not separately specified, hold 64 per cent. of the cultivated land. The Hinduised aboriginals occupy about 5·6 per cent., the Mahomedans a little under 3 per cent., and the Hindu castes, about 28 per cent. of the total area under cultivation. These figures, which represent the relative importance of each caste and religion in respect of the part it plays in agriculture in the 348 villages which came under Mr. Slack's settlement, may be accepted as approximate for the entire subdivision. The preceding statement fully bears out what I have said before regarding the agricultural occupation of professional castes. Most Hindu castes have hereditary callings, which they follow in addition to the pursuit of agriculture, on which latter they depend in a large measure for their livelihood. Thus it appears that the Áhirs and the Telís, who are seldom found to leave their lucrative caste professions, hold between them as much as twice the extent of land held by the Koeris and the Kurmis, whose exclusive profession is agriculture.

Section 2.—*The character of various castes as agriculturists.*

Character on the whole.—It may be generally said that the ráyats of Chutiá Nágpur compare very unfavourably with the peasantry of Bengal and Behar. The cultivation of land in Chutiá Nágpur Proper is much less careful, and

excepting paddy, the majority of the crops grown are of an inferior description. The cultivation of vegetables, which is attended with much labour but equally large profit, is practically absent from its husbandry, being confined only to the gardens of a very limited caste of people—the Koeris. In spite of abundant natural facilities for irrigation, it is practically absent from arable cultivation. The absence of irrigation renders the paddy harvest precarious in years of deficient rainfall, and the extended cultivation of *rabi* crops practically out of the question. With proper provision for irrigation, such as tanks, *bándhs* and wells, the plateau of Chutiá Nágpur Proper can be rendered well suited to the cultivation of various spring crops; but the natives of the country are either too poor, or, what is more probable, too indolent and short of foresight to make provision for irrigation. Not to speak of the possibility of growing new and valuable crops with proper arrangements for irrigation, the precarious condition of the existing crops has hitherto failed to awaken in them that spirit of self-help and combination which the peasants of every country are likely to exhibit in circumstances of recurring difficulty. The zamindárs of Chutiá Nágpur are unfortunately equally ignorant and improvident, and very often too much encumbered to think of investing capital in providing the necessary water-supply. To those who have opportunities of studying the agriculture of this country on the one hand and of Bengal and Behar on the other, it will be at once evident that in point of variety and richness of the crops grown and the care and labour bestowed on the preparation of land, of self-help and the desire for bettering their circumstances so conspicuous in the peasantry of Lower Bengal, the ráyats of Chutiá Nágpur lag considerably behind the Bengal peasants. I will speak below of the characteristics of the aboriginal tribes and of the Hindus and Mahomedans as bodies of cultivators.

The Aboriginal tribes —Compared with the mass of Hindu ráyats, the Kols, and among them the Uráons in particular, are considered hardy and laborious. They are particularly distinguished for all manner of earthwork, such as preparing new paddy land by digging out terraces on slopes of ridges—a work of hard labour which the better classes of Hindu ráyats are inclined to avoid. Although the Kols take so much pain and labour in the preparation of new paddy lands, their cultivation of paddy and all other crops is not distinguished by greater carefulness. Indeed, it is often otherwise. The Kols are a poor and indebted class, and want the provident and temperate habits of the Hindus; their poverty often prevents them from liberally manuring their fields in the same way as well-to-do Hindu ráyats, and from undertaking the cultivation of any crops which require much outlay. The cultivation of wheat, barley, gram and other *rabi* crops is almost entirely carried on by Hindu ráyats.

Extremely cheerful in disposition and fond of amusement, the Kols lack the thrifty and prudent habits of the Hindus. After the harvest, and as long as their store is full, they will "eat, drink and be merry," and in this way exhaust their little stores long before the time of the next harvest.

The Kols are proverbially addicted to drink, which is their great social curse. Their favourite beverage is the *hánriá* or rice-beer, of which they partake *ad libitum* so long as they can afford to do so. Besides, they are very liberal consumers of the country liquor, which in the district of Lohárdagá fetches a much larger revenue per head of population than in any other district of Bengal. Unlike the Hindu, the Kol is peculiarly proud of being drunken, inasmuch as it shows that he can spare enough for drink. Little improvement can be expected in their material condition until they are weaned from their pernicious attachment to drink, which must take away a considerable portion of their incomes, not to speak of the incidental waste of time and energy which could surely be profitably employed. In consequence of their extreme predilection for drink and of their general improvident habits, a great majority of the Kol Bhuinhárs have lost their hereditary holdings, which have passed to the hands of Hindu usurers. Scarcely ten years have elapsed since the Bhuinhári Commission, who confirmed and reinstated the Bhuinhárs in the possession of their ancestral freeholds, have completed their work; yet at the lapse of this short time it is doubtful whether as many as 10 per cent. of them have not hopelessly involved or parted with their lands.

The Kols have been hitherto regarded as scrupulously honest in their dealings with their landlords and *mahájans*. The Christian Kols of the southern

parganás have recently revolted against their landlords, to whose customary oppressive demands they are no longer willing to concede; for this reason they have been dubbed by interested parties as dishonest and untruthful; but my impressions of the Christian Kols are otherwise.

All that has been said above regarding the aboriginal tribes applies equally to the semi-Hinduized aboriginal castes.

The Hindus.—There is no difference between the Kols and the Hindus in respect of their actual methods of cultivation. I have, however, observed in many places that the Hindu cultivators being better off than the Kols, owing no doubt to their prudent and temparate habits, bestow a greater amount of money and labour on cultivation than their Kol neighbours. For instance, although the advantages of weeding are well understood, Kol ráyats often leave their paddy without any weeding, while the more careful Hindu ráyats will never leave it unweeded, and will be often found to give more than one weeding.

Among the Hindus, again, the Koeris are distinguished for their very careful cultivation of various vegetables for the market. Having to raise a constant succession of vegetable crops on a limited garden area, they are proverbially laborious and painstaking. We accordingly find that their material condition is, as a rule, much better than that of the other cultivating Hindu castes.

MATERIAL CONDITION OF THE PEOPLE.

SECTION 3.—*Dwellings.*

Accommodation.—There is no fixed plan on which the ráyat builds his premises. An average ráyat has two houses or rather huts, the bigger one of which serves as the dwelling-house, and the smaller one is a mere shed for cows. The dwelling-house may have a narrow verandah (*dhábá*) opening on the courtyard (*ángáná*). It has usually two compartments, one of which serves as the cooking, eating, and sleeping room, the other is used as a granary. A portion of the cowshed may be set off for keeping fowls if the ráyat has any; a small lean-to to the cowshed may serve as the pigsty.

Well-to-do ráyats may have two or more dwelling-houses according to the number of the members in the family. The premises of such ráyats are built in the form of a rectangle with a square courtyard in the interior. A day-labourer or a ráyat who possesses neither cattle nor ploughs, but borrows them, when required, from his neighbours, has a single hut of narrow dimensions which serves all his purposes.

Materials used.—The houses are either roofed with tiles or thatched with grass. Tiled houses are the rule in the central parganás. In the west and south-west, and generally speaking in the jungly parganás, thatched houses are commoner than tiled ones. Some twenty years ago, there were few tiled houses in the country; within this period, tiles have come into general use as a material for roofing. Tiled roofing is more costly but much more durable than grass thatch, which requires to be annually repaired. Besides, thatching-grass is not available in those parts where there is little jungle, and within the last few years it has been largely destroyed by a black spiny caterpillar, the *nanuá*—the same as infests upland paddy and *máruá*. Tiles are generally made by contract. The Kumhár or potter comes to the ráyat's house with his wheel and other appliances, and makes the tiles on the premises, charging Re. 1 for every 64 feet of floor to be covered over, besides *kharcha*, or feed for himself and his assistant, for the time he is engaged in the work.

The walls of a house are usually made of mud. Poor people who cannot afford the expenses or the time of raising mud walls improvise a cheap walling out of twigs plastered over with a thin coating of cowdung and mud.

Posts and rafters are procured by the ráyats themselves, usually free of cost, from the village jungles, or, on paying a small fine to a zamindár, from his *rákhawát* or protected jungles. The fine paid for the privilege of cutting wood in a protected jungle for house materials never exceeds 8 annas per ráyat per annum. Posts and rafters are invariably made of the tall stems of young *sál* trees.

The floor of the house is raised about a foot from the ground. It is kept clean by periodical *lepcing* with cowdung. There is seldom more than one

door to a house; the leaves are made of planks, but poor people put up *tátis* of bamboo over the doorway.

The rope used in house-making is partly *chop* or the fibre of a leguminous creeper (*Bauhinia purpurea*), and partly *sunn* (*Crotolaria juncea*), or (*kudrum-hibiscus cannabinus*). The former the ráyat can collect in jungles if he likes; the latter he always grows in small quantities for his own use.

Cost of a house.—An ordinary ráyat has not usually to buy bamboos, wood or thatching-grass, all of which he can take free of charge from the village forest; the cost of a house, 20 by 15 feet, need not then exceed Rs. 4 if thatched with grass, and Rs. 10 if with tiles, besides the ráyat's own labour. If all the articles have to be bought, a tiled house of the same dimensions would cost between Rs. 30 and Rs. 40.

The condition of dwelling-houses in the interior of the country is anything but satisfactory. Although having tiled roofs, a large proportion of the houses are low half tumbled-down huts, scarcely big enough for a single man to live in comfort The precincts of the houses, and in fact the whole neighbourhood of the village, are a mass of dirt and filth which contrasts very sadly, in my eyes, with the neat, compact appearance of a Bengal ráyat's homestead. In all large and moderate-sized villages, the houses are often built in two lines forming a narrow lane between, and are thus deprived of the advantages of isolated homesteads. A very perceptible improvement has taken place in the well cultivated parts of the subdivision, like parganás Khukrá and Doisá, in the matter of dwelling-houses. Here the houses are somewhat larger in size and neater in appearance, indicating the advance of their inmates in respect of material comforts.

SECTION 4.—*Food.*

Cereals.—The staple cereal of the country is rice, which is supplemented during certain months of the year by *gondli* (*Panicum miliare*) and *máruá* (*Eleusine corocana*), the two commonly grown millets of the subdivision, and with the better classes of people by wheat and barley. The following figures, collated from the Chutiá Nágpur Settlement Report represent the outturn of each kind of grain in 348 villages in the subdivision, and indicate the relative importance of each as an article of food:—

Statement showing the outturn of food grains in 348 *villages, and the importance of each.*

Name of cereal.	Quantity of raw grain available for food.	Quantity of cleaned grain available for food.	Percentage on total food.	REMARKS.
	Mds.	Mds.		
1. Low-land rice ...	4,92,282	3,51,630	62·0	Seven seers by weight of paddy yields 5 seers by weight of cleaned rice. Hence the figure for raw rice in column 2 has been multiplied by 5 and divided by 7 to get the quantity of cleaned rice in column 3. The same with gondli. The quantity of flour from máruá, wheat and barley is slightly less than the raw grain, but the difference has not been taken into account.
2. Up-land rice ...	1,95,979	1,39,985	24·7	
3. Gondli	53,490	38,207	6·7	
4. Máruá	33,443	33,443	5·9	
5. Wheat and barley ...	4,349	4,349	·7	
Total ...	7,79,543	5,67,616	100·0	

Accepting the above figures for the percentage as approximately true for the entire subdivision, we find that upland rice, *gondli* and *máruá*, supply about 37 per cent., or a little over one-third of the total food of the country; the only khárif cereal, low-land rice, supplies the remainder. The *rabi* crops, wheat and barley, are barely enough to supply the people with food for three days, and in fact they are consumed exclusively by only the well-to-do classes of Hindus.

The ryot varies his meal according to the cereal which he has in hand. From May till August, when his *gondli* is gathered in, he usually suffers from scarcity of food. He will live on *gondli* for a fortnight or three weeks, by which

time his *gorá* or upland rice, and a few days later on, his *máruá*, come in. These will keep him till November, when the early crop of low-land paddy (*don dhán*) is harvested. Very little of *gondlí*, *máruá* and *gorá* paddy remains in the country after November, so that from December till the next September the people have to live entirely on low-land rice.

Besides the cereals mentioned above, there are others which are occasionally eaten by the people. These are maize, *kodo* (*Paspalum scrobiculatum*), *sáwán* (*Panicum frumentaceum*), and *bere* (*Panicum miliare*). None of these may be called staples in any sense, with the exception of maize, which is grown to a considerable extent in the jungly parts of the subdivision.

Pulses and vegetables.—The ordinary pulses taken along with rice or some other grain are *urid* (*Phaseolus mungo, var. roxburghii*), rahar (*Cajanus sativa*), *kurthi* (*Dolichos biflorus*), *bodi* (*Vigna catiang*), and *barai* (*Phaseolus mungo, var. max*). Most ráyats cannot afford to eat *dál* every day of the year; this they accordingly replace by various *ságs*, a great many of which are gathered in the jungles. The *ságs*, either green or dried, are cooked by simply boiling with a little salt in *már*, or the thick starchy liquid drained off the cooked rice. *Már*, which is usually thrown away in well-to-do households, is seldom or never wasted by the ryot, with whom *már* and boiled *ságs* often form the morning meal. In Appendix I will be found a list of the various cultivated and jungle *ságs* eaten by the Chutiá Nágpur people. The vegetables commonly partaken of by the people are brinjals, radishes, tomatoes, *sakarkándá*, onions, various herbs or *ságs*, beans, *jhingí*, pumpkins and vegetable marrow, *sáru* and *pechkí* (varieties of arum), *dherass* (*Hebiscus esculentus*) and *lálkudrum* (*H. sabdariffa*). Potatoes, green pease and *patol*, although grown in the country, are too dear to be always within reach of ráyats.

Oils.—The edible oils of the subdivision are obtained from mustard and sarguzá. The ráyat makes a very sparing use of oils; in fact in cooking his *dál*, or vegetables when he gets any, little is necessary in the way of spices beyond a a little turmeric and salt. The common condiments of the Indian kitchen are coriander, anise, turmeric, onions and garlics.

Edible jungle vegetables.—In section 2, chapter IX will be found a list of the various edible jungle products of Chutiá Nágpur Proper. With two exceptions, none of these can take the place of rice, of which they may serve as good adjuncts.

The two exceptions are *máhuá* and various dioscoraceous roots or yams gathered in the jungles. *Máhuá*, the corolla of the flowers of *Bassia latifolia*, is one of the chief jungle or semi-jungle products of the subdivision. In the opener parts of the plateau, *e.g.*, parganás Doisá and Khukrá, *máhuá* trees have become very scarce owing to the wholesale clearance of the forest and to the most unnatural superstition of the people against the practice of planting *máhuá* trees. But in the southern and western parganás, and all through the jungly country fringing the plateau of Chutiá Nágpur, the trees are found in abundance growing in and around the village sites and in the jungles close by. It is rarely that *máhuá* trees are found in the heart of thick forests. The mahuá harvest takes place in March-April (Cheyt). *Máhuá* is eaten either fresh during the harvest, or dry later on. It is, as a rule, cooked before being eaten, although the poorest classes take the dry corollas as they are with a little water. I have met with many people who owned to me that they had to live on many days entirely on the *máhuá*; but it is certain that unless compelled by sheer want no one would willingly take to it as a sole article of diet. This remark applies with greater force to the numerous roots which the poorer classes of the people collect in the jungles and make use of as articles of daily food. The wild roots or yams are usually collected in the month of Mágh, after the soil of the jungles has been moistened and made sufficiently soft for digging by the first shower of winter rain. The stock of roots collected at this time does not last for a long time, but so long as it does it forms a regular article of food with the poorer ráyats.

Animal food.—The only animals reared for food are fowls, goats, sheep and pigs. There being few tanks in the country, and most of the rivers getting dried up in summer, the supply of fish is extremely scarce all over the subdivision. A few ducks and geese are also bred by the well-to-do classes of the people. The pure Hindu castes partake only of goat's flesh, fish and ducks. In respect of animal food there is, however, little distinction between the

aboriginal tribes and the semi-Hinduized castes like the Bhuiyás, Ghásís and Goráits. Generally speaking the people live a more or less vegetarian life all round the year, partaking of meat only on days of festivity. The Kols are extremely gross feeders. Although they rarely or never kill cattle for the sake of its meat, they voraciously feed on carrion, paying no regard to the disease of which the animal may have died. Very few animals are spared by the Kols; with the exception of dogs and cats, all the quadrupeds, including even the tiger, the monkey and the bear, some of the non-poisonous snakes, frogs and snails and rats, and all manner of birds, are also eaten.

Cost of maintenance of an average ráyat's family.—An average family contains six members, consisting of the ráyat and his wife and four children, of whom the eldest, if a male, can help the father at his plough, the second can look after the cattle, and the two next are too young to do any work. The three youngest children I take to be equivalent to 1½ adults in respect of the quantity of food consumed by them. In all, the six members are equivalent to 4½ adults. With full food, an adult would consume 1 pukka seer of rice per diem, or say 9 maunds in the year; 1½ chittacks of dál per diem, or 34 seers in the year; ¼ chittack of salt per diem, or say 6 seers of salt in the year; and about a pice-worth of oil and condiments per diem; or, roughly, Rs. 6 in the year. Adding up these items, we get for the year—

	Rs.	A.	P.
Rice at 9 maunds × 4½=40½ maunds at Rs. 2 per maund	81	0	0
Pulse at 34 seers × 4½=153 seers at 9 pies per seer	7	2	3
Salt at 6 seers × 4½=27 seers at 1 anna 6 pies per seer	2	8	6
Oil and condiments	6	0	0
	115	9	9

This gives roughly Rs. 9-10 for the family per mensem, and Rs. 2-2 per adult member of the family. I will show in a subsequent part of this section that few ráyats can afford to feed himself and his family on the scale of rations given above. On many days of the year the pulse is replaced by various wild herbs, which in this subdivision have the same importance as pulse in other parts of India.

Food-supply.—I have always made it an important part of my duty to enquire closely into the material condition of every village I have visited, and into the circumstances which contribute towards, or militate against, its well-being. From what I have seen, the conviction has fairly settled in my mind that a large portion of the agricultural population suffers more or less from insufficiency of food. By food is meant the staples of the country, viz. rice, maize, and various millets—those articles on which a ráyat would wish to feed himself and his family. The deficiency of staple food is made up by various herbs and other jungle products, including the *máhuá* and the wild yams. A better proof of the precarious condition of the mass of the agricultural population cannot be given than the fact that *máhuá*, the most appreciated of all the jungle and semi-jungle products, is seldom resorted to as a daily article of food, unless the people are compelled to do so by their stock of cereals running short. Notwithstanding this fact, a large portion of the people, especially the aboriginal tribes, have got accustomed to look to the jungle for their sustenance during certain months of the year.

I am led to believe that the country does not produce enough cereals to feed the people on a full scale of rations. In several villages I have made close enquiries as to the daily consumption of grain by each ráyat's family. In doing this, I had to overcome the habitual reserve and sense of shame which prevents a poor man from owning to the actual circumstances of his household, and makes him apt to give a more or less exaggerated estimate of his food-consumption. But once these were overcome, he would make a clean breast of his worldly circumstances. The following figures relate to one of the several villages in which enquiries of the above nature were made. They will speak for themselves and prove beyond dispute that the ráyats to whom they relate live on a scale of diet which the peasants of Eastern and Central Bengal will pronounce as a little more than half of their own.

Food consumption of ráyats at Bengroo in Pálkot.

No.	Name of ráyat.	Members.			Normal requirement per diem.	Actual consumption per diem.	Remarks.
		Adults.	Children.	Equivalent in adults.			
					Seers.	Seers.	
1	Suku Páhán	6	6	9	9	2½ to 5	
2	Dhuká Kháriá ...	4	6	7	7	3 to 5	
3	Suná Kháriá	2	3	3½	3½	3	
4	Mungrá	2	1	2½	2½	1 to 1½	
5	Arjun Chick	5	3	6	6	3	
6	Puhak Bhándár ...	3	1	3½	3	1½ to 2	
7	Bhakun Máhálí ...	6	2	7	7	4 to 5	
8	Málár Uráon	4	2	5	5	3	
9	Mahesh Chick ...	6	...	6	6	4	
10	Rajá Páhán	4	3	5½	5½	4	
11	Bandhoo Uráon ...	3	...	3	3	3	
12	Somá Kháriá ...	2	3	3½	3½	3	
13	Romá Uráon ...	2	1	2½	2½	2	
14	Suná Uráon ...	5	1	5½	5½	3	
15	Bahirá Uráon ...	2	3	3½	3½	2	
16	Bhudo Kháriá ...	5	4	7	7	5	
17	Chandá Kháriá ...	5	1	5½	5½	3	
18	Debrí Kháriá ...	2	2	3	3	2	
19	Máháliá Uráon ...	2	4	4	4	2	

I need not reproduce the figures relating to the rest of the several other villages in which similar enquiries were instituted. They tell the same tale, viz. that the great body of ráyats cannot afford to indulge in what will be called a luxury in this country, of a full diet of cereals all round the year.

The results of my personal enquiries are fully borne out by the following statistics collated from Mr. Slack's Settlement Report of the Chutiá Nágpur estate. They related to 348 villages scattered all over the subdivision, and having a total extent of 684 square miles or, roughly, $\frac{1}{12}$th of the area of the entire subdivision.

The total produce of food crops of this area (exclusive of pulse and oil-seeds) has been shown in the statement given in the first part of this section as 5,67,616 maunds of cleaned grain, which, distributed among the 152,710 souls, give 3 74 maunds, or 150 seers per annum per head of the population. Taking the old, adult and young, it will not be above the mark to estimate its food requirement at $\frac{2}{3}$ seers per diem, or 244 seers per annum per head of the population. If this view be correct and the statistical figures which I have adduced above be accepted, it follows that the food-supply of the subdivision is a little under $\frac{2}{3}$ maunds of the total requirement of the country (the actual proportion being 150 to 244). The figures given in the statement were obtained by multiplying the average under each crop into the average outturn per acre, which was estimated at 9 9 maunds for lowland paddy, 5·9 maunds for upland paddy, 3·38 maunds for gondli, 3·5 maunds for maruá, and 5·42 and 4·32 maunds respectively for barley and wheat. Mr. Slack while stating these broad statistical results doubted that the average outturn of rice per acre was perhaps underestimated by the ráyats but so far as my experience goes, I am unable to estimate the average outturn at a higher figure. Even supposing that the outturn was underestimated to a certain extent, the figures quoted above sufficiently show that the country does not produce enough to enable its inhabitants to live in a state of tolerable comfort.

Considering that Chutiá Nágpur Proper is sparsely populated, it may at first sight appear unlikely that the country does not produce food enough for its people. To this objection it may be replied, in the first instance, that it is not the extent of the country, but the area of cultivation, which should be taken into account in arriving at any estimate of its food-supply. We find that out of a total area of 684 square miles which were settled by Mr. Slack, and to which reference has been so frequently made, the settlement returns showed an area of 333 square miles of cultivated land. The population of this area was returned at the last census at 152,710 souls, which gives a density of 458 persons per square mile of cultivated land. In the fertile and

well-cultivated districts of Bengal and Behar to which we naturally turn for comparison, the proportion of waste land is comparatively low, so that the density of population per square mile of country falls little short of the density per square mile of cultivated land. I must admit that in many of these districts the density of population is a great deal more than 458; but it should be remembered that the soil of Chutiá Nágpur Proper is scarcely half as productive as that of the Bengal and Behar districts. I should further point out that although the area of cultivated land in the 348 villages settled by Mr. Slack has been shown above as 333 square miles, only 174,603 acres, or roughly 273 square miles, were in actual cultivation, the remaining 60 square miles, or 18 per cent. of the whole area under cultivation, lying fallow in accordance with the general principle of rotation prevalent in the country.

In the second place, the circumstances of the country and the character of the people count for a large measure of their poverty. Beyond the cultivation of land and its concommitant occupations, there is little else in the country to which the people can turn for their livelihood. The aboriginal tribes and the semi-Hinduized castes forming the major portion of the population have lived, and still live, a more or less jungly life; and being able to live on the wild products of the forest, do not bestow the same amount of care on the cultivation of land as the people of the plains, with whom the success or failure of the harvest are matters of the most supreme importance. The happy-go-lucky and improvident disposition of the aboriginal races, and the habitual state of serfdom to which they have been reduced by their Aryan landlords, have further quelled in them the desire for bettering their circumstances. The poverty of the people of Chutiá Nágpur is no new thing. Mr. Cuthbert, a former Collector of the old district of Rámgar, to which Chutiá Nágpur Proper then belonged, writes in the year 1827—"The people do not enjoy a state of great comfort; their huts are miserable, and their daily food of the poorest kind. They are of the lowest kind of Hindus, and in manners and customs little removed from savages. The only covering by the women is a small piece of cloth passed between the thighs." In the 50 years which has elapsed since these lines were written, there has been a remarkable improvement in the material condition of the people of the subdivision. The improvement is more marked in the central and well-cultivated section of the country; but as we go further into the interior, the picture of poverty depicted by Mr. Cuthbert becomes more and more vivid. Here, in place of the neat looking cottages thatched with tiles, which are met with for a considerable distance round Ránchi, we come across low miserable-looking huts "scarcely big enough for a pig with a decent-sized litter"; the ráyats look ill-fed and appear timid and shy to a degree; the men almost naked with nothing but a *kaupin* passed between the thighs; the women with no clothing above the waist: in short the whole village presents a saddening picture of want and misery. Nor are the people of the jungly parts better off in respect of food-provisions. I have invariably found that the more jungle there is in any part of the country, the smaller is the average size of the ráyat's holding and the greater is his dependence on the wild products of the forest.

What I have now said is, I believe, enough to prove that the sparsity of population in Chutiá Nágpur, instead of proving that its people are well off in respect of the supply of their food, proves just the contrary. We must not be led away by any comparison in respect of density of population between Chutiá Nágpur and the neighbouring districts of Bengal and Behar, for this among other reasons, that the races of Chutiá Nágpur not having that stake in agriculture as the Aryans have, do not extend their cultivation in proportion as they multiply, able as they are to make up the deficiency of their food-stock by jungle products collected in the forests amidst which they live.

What I have said so far applies to the mass of the agricultural population, composed of the aboriginal races and the semi-Hinduized aboriginal castes. Among these people, there are few who enjoy plenty of food and the other necessaries of life; but besides these there is a select minority in the country represented by the zemindars, the Baniyas and Sahus, and the superior castes of Hindu artisans like the oilmen, the carpenters and the braziers. Besides doing their own professions they are one and all engaged in the cultivation of land and appropriate among them a fair share of the cultivated land of the country.

The food of this class of people is much superior in quality to what is partaken of by the mass of the ráyats, and does not differ from the diet of a well-to-do Behari.

SECTION 5.—*Clothing.*

For men.—I will first describe the clothing worn by the aboriginals and the lower castes of Hindus. A poor ráyat usually contents himself with a *kaupin* or *bhágoá*, which is a narrow piece of country-cloth three feet long and costing 4 to 6 pice. It is simply passed between the thighs and attached by its ends in front and behind to the *dandas* or leather strings which he wears round the waist. Besides the *kaupin*, he will have a *káriyá* which he wears only on special occasions. The *káriyá* is a piece of country-made cloth about a foot broad, but from 15 to 24 feet long. The average length is about 12 cubits or 18 feet. It sells at 1 anna per cubit of length, and costs from 12 annas to Re. 1-4 each. A *káriyá* lasts for a year, but when two are used alternately, with each other, each will last for 18 months. In winter, the body is wrapped in a broad sheet of country cloth called *barkí* or *pechouí*, according as the sheet has one or two folds. The *barkí* is in more frequent use than the *pechouí*, which having a single fold is not thick enough for winter, which in Chutiá Nágpur is much severer than in the plains. The *barkí* is about 3 cubits broad and 6 cubits long, each fold consisting of two pieces sewn lengthwise in the middle. It costs about Rs. 2 and lasts one year if used as a covering at night; but when blankets are used for the latter purpose, a *barkí* may last two years, and often longer.

A well-to-do ráyat will never wear the *kaupin:* he puts on the *káriyá*, of which he may have a couple or more. He usually has a *págri*, which is nothing more than a *káriyá* wound round the head. For day wear in winter he has a *barki*, and for night covering a country blanket. A blanket, ordinarily costs from 12 annas to Re. 1-4, and lasts for several years.

The mode of wearing the *káriyá* by the Kols is very peculiar. It is first wound round their waist, then passed once tightly and a second time loosely between the thighs, after which the ends are brought to the waist and allowed to hang by the sides of the thighs and reach as far as the knees. In order to heighten the somewhat picturesque effect of this dress, the ends of the *káriyás* are interwoven with numerous lines of red thread, and the warp at each end is twisted into several lines and terminated with pendant balls of red thread.

For women.—The clothing of a peasant woman consists of two pieces of a *káriyá* and a *barkí*. Both are six feet long and about a couple of feet broad. Each consists of two pieces sewn along the middle. The *káriyá* is wound round the waist and barely reaches below the knees. It will last for a year, and if there are two, each for 18 months. The *barki* is worn round the body, and serves both for summer and winter. It will last for about a year. The *barki* and the *káriyá* worn by women cost each about 12 annas on the average. Instead of the *barki* and *káriyá*, a single sheet is sometimes worn by women of well-to-do families. It is the same as the *sári* of Bengal, and locally called *thethí*. Its price is very variable according to the quality; an ordinary cotton *thethí* costs from Re. 1-4 to Re. 1-8.

For children.—Children go usually naked for three years. The boys then get a *káriyá* costing about three annas, and the girls get two pieces of country-cloth known as *putohs*, corresponding to the *káriyá* and *barkí* of women, and costing about three annas each.

Cost of clothing.—The following I gather to be the cost of the clothing of an average ráyat's family. It may consist of the husband, the wife, one grown-up lad, a grown-up girl, and a young boy:—

	Rs.	A.	P.	Rs.	A.	P.
For the ryot himself—						
Two káriyás, costing Re. 1 each; lasting 18 months: for the year	1	5	4			
One barki, costing Rs. 2, and lasting two years: for the year	1	0	0			
One blanket, costing Re. 1, and lasting say three year	0	5	4			
	2	10	8	2	10	8

	Rs. A. P.	Rs. A. P.
For the eldest son—	2 10 8	
		2 10 8
For the wife—		
Two káriyás, costing Re. 1-8, and lasting 18 months	0 12 0	
One barkí, costing 12 annas, and lasting one year ...	0 12 0	
	1 8 0	
One blanket, costing Re. 1, and lasting three years...	0 5 4	
	1 13 4	
		1 13 4
For the daughter—		
Two káriyás, costing Re. 1-8, and lasting 18 months	1 8 0	
One blanket	0 5 4	
	1 13 4	
		1 13 0
For the youngest son—		
One káriyá	0 3 0	
		0 3 0
Total ...	.....	9 3 0

The above represents the cost of clothing of an average well-to-do ráyat's family, consisting of five members, provided that he has to buy every article from the cloth-dealers.

In respect of their clothing, the mass of the people show as great a poverty as in respect of their food and dwelling. In the interior of the country, where the people live in a state of seclusion from the outside world, the dress of men and women alike is extremely scanty. Women, young and old, go without any covering above the waist, round which is wound a few cubits of cloth reaching barely below the knees. Even the latter instead of being a whole piece of cloth is made up of patches of rags sewn up together and so threadbare as is scarcely consistent with decency. In respect of clothing as in every other respect the people of the central portion of the country compare favourably with those of the out-of-the-way tracts, and afford a fresh proof of the fact that in proportion as the aboriginal tribes are coming in contact with the outside world and taking part in the tide of general progress, their material condition is improving.

The use of European and Bombay piece-goods is almost unknown among the Kols and the semi-Hinduized castes, and confined only to the better and well-to-do classes of Hindus and Mahommedans. Foreign cloth is more showy and pleasant to put on, but being much less lasting is not in demand with the lower classes of the people. The Kols love to clothe themselves with clothes made of homespun cotton. Cotton-spinning is a regular occupation with Kol women. The variety of cotton known as *áthiá* or *disi* is grown in the country in preference to any other as it gives a thread which is said to be warmer and much more durable than the longer stapled varieties. When the yarn is ready, it is given to the weaver, who weaves it up into clothes of the required size, and charges his fee at the rate of 2 to 3 pice per yard according to the breadth of the cloth.

Besides the increasing amount of foreign piece-goods worn by the zemindars, tradesmen and well-to-do classes of ráyats, a large amount of English yarn is annually bought up by the weavers and made up into country-cloths. The weavers, when weaving goods on their own account, invariably buy the foreign yarn, which they find much easier to deal with and more economical than if they had, as of old, to spin out the yarn themselves. In consequence of the increasing use of foreign yarn and piece goods, the cultivation of cotton is on the wane throughout the whole of Chutiá Nágpur (*vide* Chapter III, page).

Clothing of Hindus.—In respect of the dress of well-to-do classes of Hindu and Mahommedan ráyats, I have nothing to note beyond that their dress differs in no way from that of the people of Behar. In the Five Parganás, however, the majority of the Hindus are Bengalis and dress themselves accordingly in the Bengali fashion.

Ornaments.—The usual ornaments of a young Kol woman are numerous bracelets, armlets, ear-ornaments, strings of glass and China beads for the neck,

finger and toe rings. Children and old women are seldom found to wear any ornaments beyond a pair of bracelets or so. Most of these ornaments, with the exception of some of those worn on the neck and the ear, are made of brass; the rest of copper or iron. The commonest ornament for the ear is a roll of toddy palm leaf about three-fourth inches in diameter and 1½ inches long, coloured red and set off with tinsel and lac. The neck is adorned with extremely numerous strings of various-coloured beads of glass and china Occasionally a *hásulí* or crescent of brass is worn round the neck. It is noteworthy that the Kol woman has no ornament for the nose, nor is she found with any anklets. The absence of the latter is, I believe, due to her active life which does not permit on ordinary occasions the wearing of heavy brass ornaments on the ankles.

The love of decoration peculiar to the female sex is, however, largely shared by Kol youths. The neck is adorned with innumerable necklaces of glass and china beads, and the ear loaded with rings and wonderful-looking pins thrust right across the lower cartilage The brow is set off with a semi-circle of brass; the hair, made up into a chignon, is brought on the left side and held in a brass pin topped with a small circular looking-glass.

On marriage and other festive occasions like the *Kágrá* dance, the decoration displayed by the Kols is at once embarassing and picturesque. The body is profusely decorated with necklaces and metallic ornaments, and the hair set off with yak's tail, reeds and flowers.

Value of ornaments.—Numerous as are the ornaments displayed on the person of Kol youths, their intrinsic value is, however, very small. Gold and silver ornaments are extremely rare, although their use and worth are not unknown among the Kols. The most valuable of the ornaments in use are either made of brass, bell-metal, or copper. The total value of the ornaments on the person of a Kol woman may not exceed Rs. 5. In fact this is about the amount of money which a Kol father is supposed to invest in his daughter's ornaments while giving her away in marriage. During my travels in the country, I met with only few Kol who could boast of the possession of gold and silver ornaments.

Ornaments of the Hindus.—Hindu youths do not, as a rule, put on any ornaments, unless they are very well-to do. In this case they are found to wear a pair of silver or gold bangles on the wrist, a pair or two of rings in the ears, and a plain gold ring on one of the fingers. The use of these is chiefly confined to the families of the mahájans or money-lenders. The women of the high and well-to-do castes of Hindus are seldom visible. The women of the purely cultivating castes enjoy a full share of female liberty, and take active part in light field work. Their ornaments are the same as those of Kol women, with the exception of the neck-strings, the use of which is peculiar to the Kols. Heavy brass anklets are in use among lower orders of Hindu women.

SECTION 6.—*Indebtedness.*

Forms of loan.—The following are the various forms of loan prevalent in the country:—

(1) *Rina*, otherwise called *zaripeshgi* or usufructory mortgage. According to this, land (sometimes a whole village) is pawned to the *sáhu* or money-lender on condition that the latter will enjoy the profit for a specified number of years, and after this period is over, for so long as the capital is not paid up. The *sáhu* is not, however, bound to accept payment of the debt unless it is offered in the month of Mágh, this being the time in which the annual settlements with the ráyats usually take place. The amount of money lent is adjudged by the *net* profit which is likely to remain to the *sáhu* after paying rent for the land, if any, and deducting cost of cultivation. No interest is charged for the loan, the net profit of cultivation standing in lieu of it.

The nature of the loan implies that the mortgagor must have proprietory title in the land which he mortgages. Among ráyats, *bhuinhárs* can alone raise money on the security of their *bhuinhári* lands. Only in a few villages *chatisá* ráyats claim the right of transfer, and the power to part with their holdings by sale or mortgage. The practice of borrowing money on *zaripeshgi* lease is general among the *bhuinhárs* and the zemindars.

(2) *Mokrárri lease.*—According to which the owner gives away his land to the money-lender on a permament lease, retaining only a nominal quit rent. The money advanced is called *salámi* or fine, and is usually 20 to 25 times the amount of

profit surrendered by the owner. Thus a zemindar deriving a revenue of Rs. 400 from a village, and retaining a quit-rent of Rs. 50 on leasing it permanently to the sáhu, will get a premium of 20 or 25 times Rs. 350, which is the net benefit remaining to the money-lender. This form and *zaripeshgi* are the two favourite ways of raising money on the security of land by the numerous class of landed proprietors in the country.

(3) *Bhagut bándá.*—According to which land is pawned to the *sáhu*, who cultivates it and enjoys the produce for a specified number of years, after which it comes back to the mortgagor, who has to pay nothing. A ráyat paying, for example, Rs. 4 as rent for his holding can raise Rs. 20 on surrendering to the *sáhu* the right of cultivating it and enjoying the produce for five years in consideration of the capital, and for one or two years more in lieu of interest. This form of loan is resorted to by proprietors as well as ráyats, but is not common. In former times it used to be very common, but is now being replaced by *zaripeshgi and mokrárri.*

The above are the three different forms of borrowing money on the security of landed property. The usual forms of money and grain loans are:—

(4) *Karjá.*—Money is borrowed at interest varying from half anna to one anna (and occasionally more) per rupee per mensem, according to urgency and credit of the borrower, and the amount of the sum borrowed. A small sum generally fetches a higher rate of interest. The money is borrowed on a *tamasuk* or stamped deed or as is generally the case with this and other forms of loan by opening an account in the borrower's name in the *sáhu's* book.

(5) *Seri.*—For Re. 1 borrowed in summer, 3 to 5 káts of paddy are given at harvest time. The latter includes both capital and interest.

(6) *Chará.*—For Re. 1 borrowed in summer, 20 to 25 poilas of rice are given in Aughrán in lieu of interest, and the principal paid in Mágh.

(7) *Loan of grain.*—Seed-grain fetches interest at 100 per cent., and grain borrowed for food at 50 per. cent. Such loan is taken in the summer months, from Cheyt to Srávan, when the ráyat's stock of food and seed-grain runs short, and the principal is paid at the next harvest. This is by far the most usual form of transaction between ráyats and money-lenders.

(8) *Dádni* or advance.—Ráyats take advances from money-lenders in the summer months, in which they are generally in want, and undertake to deliver to him the produce of their labour at a stipulated rate. The articles on which advances are usually taken are cotton, lac, tassar, ghee. The stipulated rate is 25 to 50 per cent. higher than the ordinary market rate

Most of the money-lenders are *bániyás* or money-lenders by caste. A few Telís and Sunrís are also found among the money-lending class. The majority of the money-lenders or *sáhus* are either natives of Behar or the descendants of those who came to the country not more than 50 years ago. Among the original landed proprietors and the ryots there are but few money-lenders; and, indeed, there are few who are solvent enough to keep themselves free from debt. The *sáhus* have settled in the comparatively larger villages of the country. Their occupation is multifarious. The poorer among them are shopkeepers, and deal in grocery, besides carrying on small loan transactions (called *len den*) with their neighbours. The richer *sáhus* are wholesale dealers in all sorts of country produce, and transact large loans with the zemindars. A large portion of the landed property of the country has already passed into the hands of the money-lenders, either by sale or mortgage. As landlords, they are proverbially grasping and avaricious, and their wealth enables them to make oppressive demands on the ráyats with impunity. Wherever there is a new landlord in a village (and the new landlord is almost invariably a money-lender to begin with), I have found the ráyats treated without due consideration, the rates of rent increased, and some of the ráyats expelled or forced to part with portions of their holdings in order to enlarge the zemindar's own cultivation.

Indebtedness of ráyats.—The indebtedness of the ráyats of Lohárdagá is a matter of proverb. Very few ráyats I did meet with who did not owe a few maunds of paddy to their *sáhus*. These paddy-loans are taken at *dehrá* interest, *i.e.*, at 50 per cent., if the grain is intended for food, or at *dobar* or 100 per cent. if meant for seed. Both principal and interest are to be delivered at harvest-time: in fact, it is the usual practice to measure out the *sáhu's* dues before the remainder is taken to the house for storage. This takes away a large

portion of the grain-income of the ráyats in a year of deficient harvest, like the last, when many ráyats were obliged to give away almost the whole of the paddy to the *mahájans*, having little for their own use.

Money-loans are not so common among the ráyats as loans of paddy and other grains. They are taken on marriage and other special occasions, when articles other than those in ordinary use have to be bought in the market.

In case of failure to pay the principal in due time, it increases every year at compound interest, *i.e.*, at the end of every year the principal and interest are added together and treated as the principal for the coming year. This is a source of the most grievous oppression for the ráyats. Instances like the following are very numerous. A ráyat had borrowed 1 maund of paddy from the *sáhu*, and at the lapse of four years, during which he was somehow unable to liquidate the debt, he was called upon to deliver 16 maunds of paddy. This latter it was beyond his means to meet, and accordingly he was obliged to sell off his cattle; or if he had any *korkar* or *bhuinhári* land, to give it away in *zaripeshgi* to the *sáhu*. The ráyats keenly feel the great hardships caused by the exaction of the money-lenders, but so long as they have the means of satisfying their demands, they will do so. They dare not displease their *mahájans*, because they cannot do without them.

The Kols are scrupulously honest in their dealings with their *mahájans*, and, being easily duped, they fall easier victims to the *sáhu* than their more crafty Aryan neighbours.

Bhagut-bándá loans are not common among the ryots, but *bhuinhári* and *korkar* lands, *i.e.*, those in which the ráyats have proprietory right are very commonly leased away to *sáhus* on *zaripeshgi*, and sometimes *mokrárri* lease The Bhuinhári Commission completed their work of delimiting *bhuinhári* lands in the year 1879; yet, at this day, after a lapse of some 10 years, very few *bhuinhárs* will be found who retain their hereditary holdings in their own hands. Most of the *bhuinhári* lands are now in the possession of *mahájans*, who, no longer afraid of *bethegári* or forced labour, which was an incident of *bhuinhári* tenure before the Bhuinhári Act of 1869 was passed, are no longer hindered from buying *bhuinhári* lands.

The amount of debt of a ráyat depends rather on his means of paying it than on his poverty. A *mahájan* will not lend to any ryot more than he can realize by selling the ráyat's cattle and other property.

Causes of indebtedness.—Once a ráyat is in debt, he finds it very difficult to shake it off. In a year of bad harvest, even a comparatively well-to-do ryot finds his stock of food short, and accordingly has no other course but to apply to the *sáhu* for advances of paddy. Even if the next harvest of paddy is a good one, a considerable portion of the produce is taken away in the payments of the grain-loan; the ráyat's stock of food is thereby reduced, and he is again obliged to borrow from the *sáhu*, who is ever ready to oblige his *ásámee* or debtor so long as he sees that the latter's income is enough to liquidate the debt.

In this way the mass of the purely agricultural population has got into debt. The extravagant and improvident habits of the aboriginal population should also account for a large measure of their indebtedness. A Kol ráyat will eat, drink, and be merry so long as his store is full, and has little thought for the morrow. In consequence he is obliged to stint himself for a few months before the *bhádoi* harvest, and to borrow, whatever his credit will allow, from his *sáhu* at enormous interest. Extravagance at marriage and other ceremonies is not such a potent cause of indebtedness among the Kols as it is among the Hindus. The marriage expenditure of an average Kol ráyat never exceeds Rs. 20, part of which he is obliged to borrow, and it is seldom that a ráyat is permanently in debt in consequence of loan contracted for marriage. I have no doubt, however, that the majority of the Kol *bhuinhárs* have sunk into a state of hopeless indebtedness owing to their extravagant habits and their extreme predeliction for drink (*vide* my remarks on the character of the agricultural population, page 10).

Effects of indebtedness.—Through indebtedness the peasants are debarred from enjoying the full profit of their labour. Many of them are found to have sunk into the degraded position of day-labourers, and others obliged to flee from their country to Assam and elsewhere. An indirect consequence is that the original peasantry of the country are being slowly replaced by Hindu intruders from the neighbouring districts. Indebtedness being synonymous

with poverty is a great bar to agricultural improvements. Innovation is of the nature of speculation, and it is those who have enough and can afford to lose can have the courage to introduce reforms. Besides poverty stands in the way of making full use of the agricultural knowledge which the ráyats possess. It is, for instance, understood that by irrigation and more liberal application of manures they can greatly increase the yield of their fields. This they are prevented from doing, because they will have to borrow further for providing means of irrigation and for buying the manure, and although larger crops will result, the interest of the loan will more than cover the increase of profit; besides they are too poor to command, and be trusted with, large loans.

Remedy.—The indebtedness of the peasantry of many parts of India is a well-sifted topic of Indian economies. I believe it has been successfully relieved in parts of the Bombay Presidency by a system of State loans at low interest. Such a system is desirable for other parts of India, where the peasantry are found suffering from the evils of chronic indebtedness. The proposal of opening agricultural banks has been for some years before the Government, the chief difficulty in the way of its accomplishment being the want of available funds. An attempt may be, however, made to encourage the formation of private banks guaranteed by the State in the same way as many of our Indian Railways. I am confident that many enterprising individuals and companies may be induced to set up agricultural banks in the country if they are promised the same amount of protection against loss as the guaranteed railways, and special facilities be afforded to them for realizing dues from recusant debtors.

Indebtedness of zamindárs.—A large proportion of the zamindárs of the subdivision are steeped in debt. Many of these have already passed under the Encumbered Estates Act (VI of 1876), and been thereby saved. The only causes of indebtedness among the zamindárs are reckless extravagance and litigation. The zamindárs of the subdivision are a most ignorant set of men, and although some of them have pretty large incomes, no regular accounts of income and expenditure are ever kept. They are always surrounded by a host of flatterers, who, having no other interest than making money, draw their masters into all manner of reckless expenditure, the better part of which they no doubt appropriate among themselves. When in pecuniary difficulties the usual practice with the zamindárs is to borrow money by mortgaging one or more of their villages in *zaripeshgi*, or by leasing them on *mokrárri*. Such mortgages are seldom, or I should say never, redeemed. It is found in consequence that a considerable portion of the landed property in the country has passed into the hands of speculative money-lenders. I have very often found that a zamindár who professes to own (say) 12 villages holds in his possession scarcely two or three, while the remaining are in the possession of *zaripeshgidárs*.

The indebtedness of the landed gentry should be looked upon as a fresh bar to agricultural prosperity. I have heard several complaints that reservoirs which used to benefit the low-lying rice fields fell out of repair and could not be repaired because the landlord was too indebted and poor to afford the necessary expenditure. The rapid disafforestment of the country and the wholesale clearing of valuable *sál* trees from its face must be also attributed to the indebtedness of the landed proprietors, who find in the sale of timber trees a ready means of satisfying their wants. From a class of people so poor and improvident like the zamindárs of Lohárdagá, no great improvement in agriculture, necessitating outlays of capital, can be possibly looked for.

SECTION 7.—*Conveyances.*

The following conveyances are in use in Chutiá Nágpur:—

(1) *Sagars.*—Until lately the only form of wheeled conveyance in use was the *sagar*, the wheel of which is not more than two and a half feet in diameter, and has no spokes, being made by joining three pieces of solid wood, axe-hewn out of a mango or *máhuá* tree. The price of a *sagar* varies from one to two rupees, according to size. Owing to the large amount of wood wasted in cutting, an average sized trunk will not furnish more than one set of wheels. The *sagar* will carry about five maunds on ordinary country tracks, and 10 maunds at the best on good road. It is extremely well suited to rough work on jungle tracks. The *sagar* is used for all sorts of agricultural work, such as

carrying manure, field produce, wood and timber from jungles, &c. Almost every well-to-do ráyat has a *sagar* or two of his own, to which he yokes his pair of plough-cattle. *Sagars* are common all over the country, but they are not known in parganá Biru in the south-west of the subdivision, where the tracks are too hilly for wheeled conveyances.

(2) *Bullock carts.*—There are few carts found in the subdivision. They are all engaged in the import and export trade, and come from Bánkoorá and Ráneegunge in Bengal, Chátrá in Házáribágh, Aurungábád, Imámgunge, Sáhebgunge and Sherghátí in Gayá. They frequent only a few good roads in the country.

The principal cart routes are the following:—

(1) The Ránchí-Puruliá road leading to Bengal;
(2) The Ránchí-Lohárdagá road;
(3) The Ránchí-Palámau road leading to Behar; and
(4) The Ránchí-Házáribágh road.

With the exception of a few carts kept by contractors and carriers at Ránchí, there are none belonging to the subdivision.

(3) *Pack-bullocks.* The bulk of the export and import trade of the subdivision is carried on by means of pack-bullocks. They are also used by itinerant retail dealers. A pack bullock carries a load of two maunds on the average: its ordinary march is 8 to 10 miles a day. Pack bullocks are seldom yoked to ploughs. Ráyats, however, turn some of their plough cattle into pack-bullocks for carrying produce to the market, and import grain, if necessary, on their own account.

A few pack-ponies are also met with. They are used by *kaserás* (braziers) for carrying brass wares to markets.

(4) *Bánghí.*—The Kols and the lower castes of Hindus carry all sorts of goods in *bánghies.* The *bánghí* is a flat, elastic *bamboo* or *dhámin* rod about 4 feet long. Over the ends are suspended two *sikás* or rope nets, in which the contents are placed. A Kol *bánghiwállá* will carry about 1 maund of burden. A Kol will never consent to carry anything, however light, on his head.

SECTION 8.—*Movements of the Agricultural Population.*

EMIGRATION—IMMIGRATION.

Castes emigrating.—Emigration exercises a powerful influence over the subdivision of Chutiá Nágpur Proper. The emigrants are recruited mainly from the Kol population of Uráons, Mundás and Kháriás, but include a small proportion of the semi-Hinduised aboriginal castes, like the Ghásís, Máhális, Goráits and Lohárs. The Kols have the reputation of being hardy and laborious, and are therefore highly valued in the tea districts. It is further believed that they enjoy comparative immunity from malarial fever, which is so predominant in the damp and jungly climate of tea-gardens. The great majority of emigrants are Mundás and Uráons. Unlike the Hindus, they do not object to travelling long distances, and as they are accompanied by their wives and children, and many have no permanent stake at home, they willingly go abroad. The Mundáris go by preference to Assam, but many of the Uráon emigrants go to Calcutta and the Sundarbans, where they are highly valued for all manner of earthwork. Very few pure caste Hindus leave their homes for employment abroad. Besides, being lighter-complexioned, they are not in request with tea-planters, who place the highest value on the darkest skinned coolies.

Emigration does not take place equally from all parts of the subdivision. From the country within a few miles of Ránchí, very few would go abroad, as work is always plentiful at the station. The greatest number of emigrants are recruited from the most jungly and backward parganás, like Biru, Bassiá, Pálkot, &c., furnishing a fresh proof of the precarious condition of the people of those sparsely peopled tracts. Nearly all such coolies are taken to Assam, they being too ignorant and in want of immediate help to think of emigrating at their own instance. The emigrants from the central parganás of Khukrá, Doisá, &c., who are mostly Uráons, are more independent and intelligent, and would not go to the 'labour districts' if they can help it. Calcutta, Darjeeling and the Duárs offer to them more attractive fields for employment, where they would get higher wages than if they went to Assam, without being bound down by contracts.

A large portion of the emigrants to Assam is recruited from the landless classes, including day-labourers and petty artizans, like the Ghásis, Máhális (basket weavers), Goráits (watchmen), and Lohárs (blacksmiths). These classes are never well off, and the hardest pinched in years of high prices. They are therefore the first to emigrate at the approach of impending scarcity. The rest of the emigrants are obtained from among the ráyats.

Immigrating districts.—The following are the districts into which immigration from Chutiá Nágpur takes place:—

(1) The tea districts of Assam, Sylhet and Cachar. These are specified as labour districts within the meaning of the Inland Emigration Act (No. I of 1882, I.C.)

The coolies of the Assam, Sylhet and Cachar tea-gardens are bound down by contract for three or five years. At the close of his agreement a cooly is at liberty to enter into a fresh contract with his former employer, or to come away, as he pleases. Many also settle down in the districts as ordinary cultivators. It is doubtful whether as many as even 50 per cent. of the emigrants to the 'labour districts' come back to their homes. The wages paid for contract labour average Rs. 5 per mensem.

(2) Darjeeling, Jalpáigurí and the Duárs. These are also tea districts, but the coolies are free labourers and not bound down by any contract.

The emigrants to the tea-gardens of Darjeeling, the Duárs and Jalpaígurí are free labourers. They are not bound by any contract as to period of service, and can stay or leave just as they like. Emigrants to these districts usually leave their homes about or after the close of the December paddy harvest, and after working in the gardens for nearly a year come back at the close of the tea season in October and November. The wages of a cooly average about the same in these districts as in Assam.

(3) Calcutta and its neighbourhood. A large number of Nágpuriás, and in particular the Uráons, are entertained as scavengers by the Calcutta and Suburban Municipalities, and by the gentry to work in their gardens.

The coolies or *dhángars* employed in Calcutta and its neighbourhood are the pick of their class. They flock to the metropolis after the close of the paddy harvest in December, work for four or five months, and then leave about May for their homes to resume agricultural work as soon as the rains set in. There being little or no *rabí crops* in Chutiá Nágpur, the ryots have no field work during the cold weather months, which some of them turn to advantage by going to Calcutta and working there for wages. The wages obtainable in Calcutta are much higher than elsewhere. A dhángar may earn from Rs. 7 to Rs. 10 a month by taking service with a municipality and by miscellaneous work in extra hours. A temporary emigrant may take home some Rs. 20 after having worked for four or five months. Emigration to Dinagepore is of the same transient character as that to Calcutta. Only male adult coolies emigrate to the Bengal districts, and unless they mean to settle for a long time, do not take their wives and children with them.

(4) The Sundarbans give employment to a large number of Kols. For reclaiming lands by cutting down jungle, and by raising earth dykes, the Kols are employed in preference to Bengalí settlers.

The emigration to the Sundarbans is of a more permanent character. The Kols come and settle here in the character of ryots rather than as mere day-labourers. They build houses, buy cattle, reclaim and cultivate land, and may be called true colonists. I am told that it is not uncommon to find in the Sundarbans small villages inhabited mainly by Kols. A large number of Kols annually flock to the Sundarbans at paddy-harvesting time, and earn good wages by reaping.

(5) Dinájpur. A small number of Kols emigrate annually to this and neighbouring districts, where they are entertained for such earthwork as digging tanks.

(6) The Tributary States of Gángpur and Jáshpur, adjoining Lohárdagá on the south-west and west. From the central parganás, where the pressure of population on land is already felt, and the soil has become much less productive through continuous cultivation, a great many people emigrate to the jungly mehals, where they settle on lands let to them by the Rájás on very favourable terms. The Kols always love to cultivate new virgin land, on which they can without much labour raise various up-land

crops. It results therefore that, even from Biru, Bárwe and other jungly parganás on the frontier, many ráyats are tempted away by the prospect of getting new lands to cultivate in the wild jungles of the Tributary Mahals. On my passage through Biru I came across several old village sites, where no vestige of their previous occupation is now found, excepting a few mango topes.

Registered and free coolies.—Chutiá Nágpur Proper is the great recruiting ground for coolies employed on the tea gardens of Assam, Sylhet, and Cachar on the one side, and Darjeeling and the Duárs on the other. Besides these, as has been said above, large numbers annually resort to Calcutta, the Sundarbans, and Dinájpur. Only a fraction of those who go to the labour districts under Act I of 1882 are registered at Ránchí before they leave the district. The great majority of the Assam, Sylhet and Cachar coolies leave as free emigrants, and no sooner they enter the threshold of the labour districts are registered and bound down by agreement with the same effect as if they had entered into the contract in their native district. These so-called free emigrants are not registered before they leave the district. There is, therefore, no means of ascertaining their number. Only such coolies as have taken advances from 'local agents,' or show any sign of refractoriness are registered before leaving for fear they may refuse to enter into labour contracts later on.

Extent.—The proportion of registered coolies is small in comparison with the number of unregistered coolies emigrating to the 'labour districts,' and is still smaller than the total number of emigrants of all classes. We have no means of estimating the number of coolies annually resorting to the tea districts of Darjeeling and the Duárs, to Calcutta, the Sundarbans and Dinájpur. It has been roughly guessed that besides those registered at Ránchí all of whom must go to the 'labour districts,' about 10,000 coolies leave annually for these places, and another 10,000 leave annually as nominal by free emigrants to the labour districts of Assam, Cachar and Sylhet.

The total number of emigrants of all classes has been estimated at 20,000 to 25,000.

The number of emigrants of all classes rise, however, beyond all proportion in a year of deficient harvest like the last. The efflux of emigrants after the last December harvest was astonishing. It is said that many villages have been literally decimated. Besides the tea districts, a very large number of Kols sought employment on the Bengal-Nágpur Railway, now in progress.

Emigration from Chutiá Nágpur has been active ever since the occupation of the country by the British. Mr. Cuthbert, a Magistrate of Rámgar, writes in 1827 that a large number of Kols annually leave the district for Bengal, where they are entertained by indigo planters and others. These people, in common with the Sontáls, were and are still known as *bunás* or jungly men. The following statement shows the numbers of registered coolies in the years from 1863-64 to 1886-87:—

Statement of Registered Emigrants from 1863-64.

Year.	Number of registered coolies.	Number of dependents.	Total.	Remarks.
1863-64 to 1866-67, 3 years ...	.....	.....	12,369	These figures are for the whole district of Lohárdagá, including Palámau; but as little or no registered emigration takes place from Palámau, the figures properly appertain to the head-quarters subdivision. The figures for 1879-80, 1883-84 and 1885-6 were not available.
1867-68	.....	.....	.....	
1868-69	.....	.....	883	
1869-70	.....	.....	877	
1870-71	.....	.....	650	
1871-72	.....	.....	542	
1872-73	.....	.....	1,405	
1873-74	.....	.....	2,530	
1874-75	.....	.....	3,075	
1875-76	.....	.....	3,922	
1876-77	.....	.....	3,960	
1877-78	5,921	4,100	10,021	
1878-79	6,103	5,107	11,210	
1879-80	.....	.....	.....	
1880-81	1,258	627	1,885	
1881-82	1,798	968	2,766	
1882-83	1,073	622	1,695	
1883-84	.....	.....	.....	
1884-85	663	335	998	
1885-86	.....	.....	.....	
1886-87	271	172	443	

The number of registered emigrants in any one year is not a sure index to the total number of emigrants free and registered. It will be found from the above statement that the number of registered coolies has varied within considerable limits, according as the provisions of the law of emigration for the time being in force encouraged free emigration or otherwise. Up to 1866-67 registered emigration went on to a very considerable extent. Before and since then free emigration was fast coming in vogue, and the number of registered emigrants accordingly fell down to 542 in 1870-71. Act VII of 1871 placed certain restrictions on free recruitment, and accordingly the number of registered emigrants gradually rose from 1,405 in 1872-73 to 11,210 in 1878-79. The Inland Emigration Act (No. I of 1882 of the India Council) was passed to meet the wishes of Assam tea-planters, who wanted to avoid the cumbrous and expensive process of recruiting coolies through contractors and to facilitate the *sardári* system of recruitment. Under this Act free emigration has been fast superseding registered emigration, which shows a decrease from 11,210 coolies in 1878-79 to 443 in 1886-87. In fact, at present only the wayward among the intending emigrants, and those who have taken advances, are registered before leaving the district, to prevent them from running away or from refusing to sign the contract.

Causes of emigration.—Emigration from Chutiá Nágpur is due to many causes. In the first place the aboriginals (Kols) have been largely superseded by Hindu settlers from Behar and elsewhere. Many of them have lost their proprietary holdings, and been reduced to the position of day-labourers. Having nothing at stake in the land of their birth, any little incentive is enough to induce them to leave home for any place offering good wages. The rapacity of unscrupulous zemindars and money-lenders accounts for a large measure of the emigration. The Kols are a down-trodden people and may be fitly described as drudges of the country. Being too simple and honest, they cannot cope successfully with their wily superiors, and are frequently called upon to meet exorbitant demands which they have no means to satisfy. In these circumstances, flight from home is the only ready means which they can avail themselves of to get out of the way of their masters.

There is an increasing pressure of population in several parts of the subdivision. The density of population in no part of it exceeds 250 souls per square mile, yet the agricultural resources of the country are so poor that the total produce of cultivation is not sufficient to furnish the people with full ration all round the year. The increase of pressure is further emphasized by the diminishing fertility of the soil through continuous cultivation.

Much of the spontaneous emigration to Calcutta and Dinájpur is due, as has been said above, to want of occupation in the spring season.

Besides the causes enumerated above, family quarrels, scandalous connexions between young people of both sexes, and various dishonest motives, are responsible for a small portion of the emigration.

Effects of emigration.—Emigration exercises its influence over Chutiá Nágpur in many directions. It relieves the pressure of population which undoubtedly exists in many localities, and checks the rapacity of landlords and money-lenders, who are afraid lest their tenants and clients will flee to avoid exorbitant demands. Besides, it brings money into the district—which is a great thing for poor people; but unfortunately the best portion of this wealth is soon squandered away in drink, and is lost to all useful purposes. In discouragement of emigration, it is sometimes urged that it takes away a large proportion of the able-bodied men and women of the country, and that population being already sparse, any diminution of it by emigration cannot but tell prejudicially on cultivation. I have heard frequent complaints that many fields have been left uncultivated owing to their tenants having fled away, and that if the tide of emigration continues unabated for a few more years, a portion of the country will be permanently thrown out of cultivation. No such fear can be reasonably entertained. The people of Chutiá Nágpur are a remarkably prolific race; and taking the minimum rate of increase of population—two per cent. per annum—the annual accession to the population is far greater than the number of emigrants by the highest estimate (32,000 against 25,000). It ought to be further remembered that those of the emigrants who go to Calcutta and Dinájpur come back every year before the cultivating season begins. It may happen that many villages and fields, as I have said before, will be

thrown out of cultivation. Such a state of things must follow in strict obedience to a law of economy with which no one must interfere. It is not right that a man should starve himself in his native village, and abstain from going to other places where he can get good wages and render useful work, simply because his absence from the village would cause his holding to be thrown out of cultivation.

Chutiá Nágpur Proper enjoyed until lately a more or less complete isolation from the neighbouring districts of Bengal and Behar; consequently there could be little competition between them either in respect of land or of any market. able commodities. Now that the barrier of isolation has crumbled down, and communication between Chutiá Nágpur, Bengal, and Behar is becoming freer every day, the cultivation of land and the rates of rent will come more and more under the operation of Ricardo's Theory of Rent. When the wages of labor will be more equalized, necessitating large increase over the existing wages of the subdivision, it is doubtful whether a large proportion of the up-lands which are now cultivated, not because they pay well or at all, but because there are no better lands available for cultivation, will be left fallow, and cultivation will be restricted only to the better classes of lands which leave sufficient margin of profit after making allowance for the ryot's personal labour.

Abuses of emigration.—Various abuses take place in connection with the recruitment of coolies; but the subject of emigration abuses has no direct concern in a report of this kind. I may only say here that they should be prevented so far as possible with a view to facilitate emigration and protect the ignorant peasantry of Bengal from being duped by cunning recruiters.

Immigration.—There is no immigration at present into Chutiá Nágpur. About the beginning of this century there was a steady flow of immigrants from Behar who settled in Chutiá Nágpur Proper as petty traders and artisans The descendants of these people now predominate in the country in the various characters of zemindars, mahájans, artisans, and ráyats. In addition to their respective crafts, they are all engaged in the cultivation of land.

SECTION 9.— *Village officials and Village disputes.*

Ancient village organisation.—"According to ancient and universal tradition, the central table land of Chutiá Nágpur Proper was originally divided into *párhás* or rural communes, comprising from ten to twenty-five villages, and presided over by a divisional chief, called the *rajá* or *mundá* of the *párhá*. In 1839, titular *rájás* of the *párhá* were still existing in the fiscal division of Khukrá near Ránchi, who retained considerable authority in tribal disputes and at times of festival and hunting. But this element in the Kol village system has now fallen into decay, and survives only in the *jhándis* or flags of the *párhá* villages, and in the peculiar titles bestowed on the cultivators themselves. The exclusive right to fly a particular flag at the great dancing festivals is jealously guarded by every Kol village, and serious fights not unfrequently result from the violation of this privilege Besides this, individual villages in a *párhá* bear specific titles, such as *Rájá*, *Dewán*, *Kumár*, *Thákur*, *Chota Lál*, &c., similar to those which prevail in the household of the reigning family, which obviously refer to some organisation which no longer exists."

This peculiar Kol village organisation must have sprung up before the Hindus came to the country, but must have been considerably moulded by Hindu influence, as is evident from the Sanskrit names which the chiefs bore. It seems probable that as the Hindus gradually gained in strength and influence, the influence of the *párhá rájás* gradually diminished and became finally extinct, and the old village community was finally superseded by a more elaborate organisation in harmony with the Hindu social constitution. The remnants of the *párhá rájás* are, I believe, still found in the Mánkis of the Five Parganás, who still hold about 12 villages each, of which one or two remain in his own *khás* possession, and the remaining ones held by *mundás* or village heads, subject to the payment of quit-rents to the Mánki. A typical village community consists, when perfect, of the following officers:—*Mundá*, *máháto*, *páhán*, *pánbhará*, *bhándári*, *goráit*, *kotwár*, *áhir*, *lohár*. Washermen, barbers, and potters are found only in comparatively large villages in which the larger tenure-holders live. The Kols invariably shave themselves, and their women wash the clothes.

(1) *Mundá* (Sans. *lit.* head).—The *munda* is the chief of the *bhuinhárs* or descendants of the original clearers of the village. He is a person of great consequence in the village; and all demands from the *bhuinhárs*, whether of money or labour, must be notified by the owner of the village through the *mundá*. He enjoys no service land, but being himself a *bhuinhár*, he holds some *bhuinhári* land either free or on quit-rent. In the fiscal division of Lodhmá, in the Five Parganás in the east, and in all the southern parganás, the *mundá* performs the duties of the *máháto* as well as his own, and he then gets a small *jágír* of half a *páwá* of land rent free. In most villages the *mundá* claims to be hereditary, but in a few villages he is appointed by the zemindar, the *páhán*, or the villagers themselves. He should, however, be always selected from the *mundá khunt* or family.

(2) *Máháto* (Sans. *lit.* chief).—The *máháto* may be fitly described as a rural settlement officer. He allots the land of the village among the cultivators, giving to each man a clod of earth as a symbol of possession. The practice of periodical redistribution of land amongst the tenantry, and of giving *goti*, was once universal, but now survives only in very backward villages. When there is no *barâhil*, or rent-collector, the *máháto* collects the rent, pays it to the owner, and settles any disputes as to the amount due from the ráyats; and in short manages all pecuniary matters connected with the land.

In consultation with the *páhán*, he can elect new settlers and settle all vacant village lands either with new settlers or resident ráyats. He has various other executive powers, and may be considered the head of the village executive.

The *máháto* is usually appointed by the zemindar; but in some villages the ráyats claim the right of appointing the *máháto*, who is subsequently confirmed by the zemindar, and when there is a *máháto khunt* in the village, he should be always selected from the *máháto khunt*. In the absence of the *máháto khunt*, the *máháto* may be a *bhuinhár* or any ordinary ráyat. The office is neither hereditary nor permanent, and the *máháto* is liable to be dismissed at the landlord's discretion. Dismissal is, however, nominal, and he is often succeeded by his son. The *máháto* receives one *páwá* of *rájhus* land rent-free, as a *jágír* or service tenure. Such *jágír* is called *máhátoi*. Where the *máháto* collects the rents, he almost universally receives a fee, called *bátta*, of half an anna per cultivator, or of one anna for every house in the village. Occasionally, where there is no *bhándári* or agent for the owner's rent-paying land, the *máháto* gets three bundles (*karais*) of grain in the straw, containing from 10 to 20 *seers* a piece, at each of the three harvests—millets, *gorá*, and *don* paddy. In *khálsá* villages, which are under the direct management of the Mahárájá, the *máháto* often holds in addition to his official *jágír* a single *páwá* of land called *kharchá* or *roziná khet*, from the proceeds of which he is expected to defray the occasional expenses incurred in calling upon cultivators to pay their rent, &c.

The functions of the *máháto* are shown in greater detail in the following extract from Dr. Davidson's report of 1839:—

"On a day appointed, the thikadar or farmer proceed to the ákrá or place of assembly of the village, where he is met by the máháto, páhán, bhándári, and as many of the ráyats as choose to attend. He proceeds, agreeably to the dictation of the máháto, to write down the account of the cultivation of the different ráyats, stating the number of páwás held and the rent paid by each. Having furnished this account, any new ráyats who may wish to have lands in the village, after having the quantity and rent settled, have a goti given to them. If any of the old ráyats require any new land, a goti is taken for that, but not for the old cultivation. The máháto collects the rent as the instalments become due, according to the above-mentioned account given to the farmer; and all differences as to the amount of rent payable by a ráyat, if any ever arise, which very seldom happens, are settled by the opinion of the máháto. So well does this mode answer in practice, that in point of fact a dispute as to the amount of rent owed by a ráyat is of rare occurrence. When a farmer wishes to cheat a ráyat, he accuses him of having cultivated more land than he is entitled to, or of owing him maswár or grain-rent for land held in excess; and if such a thing as a dispute as to the amount of rent owed ever does arise, the máháto's evidence is generally considered conclusive by both parties."

(3) *Páhán.*—The importance of the *páhán*, or priest of the village gods, may be inferred from the current phrase in which his duties are contrasted with those of the *máháto*. The *páhán*, it is said, "makes the village" (gaon bánátá), while the *máháto* only "manages it" (gaon chálátá). He is always chosen from the *páhán khunt*, and as such must be a *bhuinhár*, as no one but a descendant of the earliest settlers in the village could know how to propitiate the local gods.

The appointment of a new páhán takes places at the Sorhul Pujá time in Cheyt or Bysák. Then the Páhán who is to vacate office goes dancing ahead of the village young men, who play on drums, and carrying a vermilion smeared "sup" or basket in his hand. He goes to each hut, and passing his hands down the door posts, asks for and gets contributions. When every house has been visited, the páhán and villagers adjourn to the Sarna or sacred grove, where a pujá is performed and a feast held, the contributions collected by the páhán providing the food. Then a boy is taken and a cloth lightly tied round his eyes; a "sup" is fastened to one end of a long bamboo, while the other end is put in the hands of the boy, who runs off with it to the houses in the village. The man into whose house the boy enters is declared to be the new páhán.

The *páhán* assists in collecting rent, in electing new settlers, and in settling vacant lands in the village. His chief duty, however, is to propitiate the local gods or *bhuts* by sacrifice and *pujá*. To meet the expenses incidental to *bhut* worship, he holds various lands rent-free. All such lands are known generally as *bhut khetá*, literally "*lands of bhuts.*" (*Vide* page 109, in the chapter on Land Tenures.)

The *mundá*, *máháto* and *páhán* are the heads of the village. In comparatively few villages all these three officials are found. In the Mundári villages, the village *mundá* performs the *máháto's* duties as well as his own, while in the Uráon villages there is generally no *mundá* whose duties are performed by the *máháto*. In some villages the *páhán* acts as the *máháto* or the *mundá* where no such official exists. No village can be without a *páhán*, who is the *sine quâ non* of village life.

The authority of the *mundá*, *máháto* and *páhán* in all matters connected with the village must have been considerable at one time; but it has been in recent times largely broken down and superseded by that of the Hindu landlord and farmer, who reign supreme in the country.

(4) The *Pánbhará* (*lit.* one who fills water). The *pánbhará* is the *páhán's* assistant, and supplies water and cooks fowls, &c., at festivals. He is appointed by the villagers once in three years by the "sup" process in the same way as the *páhán*. In some villages, however, his office is claimed to be hereditary. He enjoys the *pánbhará* or *tahálu* lands of the village.

In many villages there is a Hindu *pánbhará* who is appointed by the zemindar and holds office during his pleasure. He is usually a man of the Goálá or Áhir caste, and is occasionally a Kumhár or potter. His duty is to supply water to the zemindar, any of his servants, or Hindu Government officials whenever they visit the village; and in return for this duty he gets about a quarter páwá of land rent-free.

(5) The *bhándári.*—The *bhándári* (*lit.* store-keeper) is the landlord's agent in respect of the management of the *khás* lands of the village. He calls periodically for *madat* and *begári* from ráyats, looks to the cultivation of *mánjhihus* or *khás* lands, and is in charge of the store of grain. He generally enjoys one *páwá* of land as rent-free service *jágír*; besides he gets three *karáis* or sheaves of each of the three crops, *gondli*, *gorá*, and *don* rice, &c. from each ráyat in the village *Bhándáris* are found only in those villages in which the zemindars have *mánjhihus* in their khas cultivation.

(6) *The Goráit.*—The *Goráit* has been described as the village drudge. He is under orders of the *máháto* and the *páhán*. He communicates the zamindár's orders to the ráyats, brings them to the *máháto* or *baráhil* to pay their rents, selects coolies for the zemindar or public servants, and acts as the general village messenger. He is remunerated by three *karáis* or sheaves from every cultivator in the same way as the *bhándári*. Occasionally he holds some lands rent-free as *goráiti jágír*.

(7) *The Kotwár*—Is found only in large villages. He is the village constable or watchman; is appointed by the zemindar, and holds his service during the latter's pleasure. This official is now gradually becoming scarcer, his place being filled by the police chowkidar. The *kotwár* usually enjoys a small service jágír, besides which he gets small grain gifts from ráyats.

All the above officials, with the exception of the *Pánbhará*, form together the village executive. The *áhir* and the *kumhár*, like the *dhobi* and the *házám*, are mere village servants, and have no voice or power in the management of the village.

(7) *The Áhir or Godlá.*—The *áhir's* duty is to look after the village cattle and to account for any that are stolen. This official has now become extinct in most villages in the open part of the subdivision, where, there being no jungles, the number of cattle kept is very small. The *áhir* is, however, an invariable adjunct of all villages where jungle and pasture land are available for the grazing of a large number of cattle. He is remunerated by a payment of one *kát* or maund of paddy for each pair of plough bullocks owned by the cultivators whose cattle are under his charge. Plough bullocks are made over to the *áhir* only when the owners cannot afford to pasture them separately from the cows. In any case, they are always separately fed and pastured by the ráyat himself during the six months from May till October, when, field work being heavy, the animals require good feeding. For plough bullocks he also gets from every cultivator three *karáis* of grain at harvest time, besides an occasional *sup* of paddy. If cows are under his charge, he takes every alternate day's milk as his perquisite. For she-buffaloes the *áhir* gets either one day's milk out of every three days, or occasionally he chooses one out of every 12 buffaloes under his charge and appropriates the whole of her milk. The particular buffalo chosen is always the one actually giving the largest quantity of milk. In the month of Aghrán he takes five seers of milk round to the cultivators, receiving in return *pákheri* or twenty seers of paddy as a free gift. The *áhir* is held liable to pay a stipulated quantity of ghee on the part of ráyats to the zemindar free of charge, and other quantities under various names at abnormally cheap rates. (See *abwabs*, page 143). When a ráyat has a large number of heads of cattle, and keeps a servant of his own to tend them, he is bound to give the *áhir* a reasonable quantity of grain or money to enable the latter to meet the zemindar's demand of ghee.

(8) *The Lohár or village blacksmith.*—His duty is to keep the village ploughshares in repair. Considering that the plough-shares require to be repaired every two or three days in the working season, frequently oftener, the lohár is an eminently useful personage in the village. He gets in return for this work 1 *kát* or maund of paddy and 3 sheaves at each harvest time for every plough in the village. He is separately remunerated for any other work he may happen to do for individuals.

Village officials in Tori and the Five Parganás.—"In the Fiscal Division of Tori, the bulk of the inhabitants belong to the Khárwár subtribe of Bhogtás, and the village system differs from that which prevails on the central plateau. Here the páhán is the only official who holds service land, and he gets half a pátti, or not quite two standard bighas. He performs the village pujás, and often does the work of a máháto, when the owner of the village is an absentee. But even then the landlord sometimes employs a bailiff, called baráhil, to collect the rents.

In the tract known as the Five Parganás, including the Fiscal Divisions of Támár, Bundu, Sillí, Ráhe, and Barándá, as well as in the Mánkipattí, or that part of Sónpur pargana which borders on Singbhum district, we meet with Mánkis and Múndas, who are undoubtedly the descendants of the original chiefs, and still hold the villages which their ancestors founded. Here the párhá divisions exist in their entirety, as groups of from 12 to 24 villages, each of which has its own Mundá or village head; while the whole commune is subject to a divisional head-man, called Mánki, who collects the fixed rents payable by the Mundás. The chief village officer is the páhán, who holds from one to five káts of land rent-free as dálikátári. In this part of the country the Múnda sometimes has a deputy, called dewán, who assists him to collect his rents, and bhándáris are occasionally met with."

Village disputes.—Disputes as to rents due are settled by the *máháto*, whose evidence is generally considered conclusive by both parties. The authority of the máháto is now sensibly diminishing, and disputants are showing increasing tendency to resort to the procedure of the law courts.

Questions of facts as to the ownership of land are decided by the oath of the *páhán* sworn on the land. The *páhán*, standing on the contested land, takes up a clod of earth, and, placing it on his head, swears to speak the truth, imprecating awful calamities on himself, his children and his crops in the event of his telling a lie. This procedure is now rarely resorted to, and the *páhán's* evidence, which at one time was accepted as conclusive in law courts, is no longer implicitly believed in.

Disputes as to boundaries of two villages are decided by the *páháns* of the contesting villages. In this matter, as well as in every other dispute relating to land, the *máháto* and the *páhán's* authority has visibly broken down. This is the case particularly in those villages where the Hindus predominate. The *mundá*, the *máháto* and the *páhán* being all Kols, good Hindus would consider it beneath their dignity to appeal to these low-caste officials for help in any matter. The ordeal of *gorgári* or leg-burying, which used to be resorted to in the event of a genuine doubt, where two *páháns* were at issue on a question of fact, is described in pages 332-33 of volume XVI of the Statistical Account of Bengal.

Family and social disputes are usually settled by *panchayets*, the members of which are selected from the caste of the disputants.

Disputes connected with land and rent are comparatively much rarer in Chutiá Nágpur than in most other countries. This can be inferred from the very small number of rent and civil suits which come up before the local courts (*vide* Statistics of Rent suits, page 146).

Section 10.—*Day-labourers.*

Day-labourers, that is those who live on day wages, are a limited class in Chutiá Nágpur Proper. They are mostly found at Ránchi, Bundu, Lohárdagá and a few such large villages, and are employed on miscellaneous work. For purely agricultural work, day-labourers are seldom employed. At planting, weeding and harvest times, large numbers of women, boys and girls are employed, however, on daily wages, who are occasionally paid in cash, but more frequently in kind. The wages of a day-labourer, if paid in cash, vary from 6 to 8 pice, on the average 7 pice per diem; of a woman or boy 3 to 4 pice. Daily wages are, however, usually paid in grain at the rate of 3 to 4 *bára-gandi pailás* of paddy per man per diem. In years of cheap prices as much as 6 to 8 *pailás* are paid. The cash price of the grain wages are 5 or 6 pice. The material condition of day-labourers differs in no way from that of the ordinary agricultural labourers who are employed on annual wages. The following three modes of employing agricultural labour are in vogue in the subdivision:—(1) The common system is to hire a labourer by the year. The engagement is entered into in Mágh and extends over one year. The labourer called *dhángar* or *manish* (*lit.* man) receives, besides a certain cash pay, 18 *chappánaha* káts or maunds, or 24 *sewáiá* maunds of paddy per annum. At mid-day he gets 1 *poa* of cleaned rice as *piáo páni*. The cash pay is variable, according to the condition of the labourer and the hardness of the work he is usually put to. It varies from Rs. 7 to Rs. 10 per annum, and often rises as high as Rs. 12 in case of labourers employed on irrigation. The whole or a large portion of the cash portion of his wages is paid in advance with a view to bind him down. Dishonest *dhángars* often run away to Assam, leaving their masters out of pocket by the amounts advanced and helpless in critical times.

(2) The *sájhádári*, a system of joint cultivation adopted in cases when one man has land without cattle and implements of tillage, and another man has the latter without land. The *sájhádár*, that is the owner of the implements, cultivates the land himself, finding the manure and only half the seed. The produce is equally divided between the two.

(3) The *pasridári* or *kámiádári* system.—The *kámiá* or *pasridár* is a labourer who himself holds some land, but possesses neither cattle nor implements. He takes service on the condition that he will work two days in his master's fields and be entitled in return to the latter's cattle and ploughs for a single day's work on his own land. For the day he actually works in his master's fields, he gets about 3 seers of paddy. Besides he is entitled to small perquisites at harvest time. The engagement is entered into in Mágh, and its conditions vary largely in character. In parts of the Five Parganás the *kámiá* claims the exclusive right of harvesting the paddy crop of those of his master's fields which he has cultivated himself. The *kámiá* wishes to appropriate the whole of the wages paid by his master for reaping his paddy, and as harvest wages are considerably above the ordinary wages, he will not let any other labourer harvest his master's crop.

The number of labourers.—Pure agricultural labourers form a numerous class in Chutiá Nágpur Proper. About 20 per cent. of the population, I believe, live by taking service as labourers with their neighbours. In several villages I found

as many as 25 per cent. of their population living on the wages of labour. In the 348 villages which were settled by Mr. Slack the total number of cultivating families was found to be 16,640, and the number of non-cultivating families to be 5,483. The number of non-cultivating or landless families is therefore 24·8 of the total number of families inhabiting the village. The majority of the landless families are agricultural labourers, the rest being poor artisans like the *máhális*, *ghásis*, *chámárs*, &c. It may be therefore safely concluded that about 20 per cent. of the population live entirely on the wages of labour. Besides these, members of the families of the poorer classes of ráyats often work as agricultural labourers in order to earn a lump sum of money, and thus increase the family stock of capital.

In the smaller villages there are comparatively few non-cultivating families. Almost every house owns a few bighas of land which he may cultivate at the same time as he works as labourer to his richer neighbour. The landless classes, including the pure agricultural labourers, are found in the largest numbers in the larger villages where the Hindus predominate. Many of the well-to-do Hindu cultivators do not work themselves in their fields, and must engage annual labourers to do the work for them. For this reason every large village shows a considerable proportion of agricultural labourers.

The material condition of the labourers is anything but satisfactory. Most of them would live from hand to mouth, and have not at any time more than a few days' provisions to depend on. Along with the poorer classes of artisans, they are the first to feel the pinch of scarcity.

CHAPTER III.

Section 1.—*Climate.*

There are three seasons marked by distinct characteristics in Chutiá Nágpur—(1) the rainy season, (2) the cold weather or winter, and (3) the hot weather or summer.

The rainy season commences in a normal year about the middle of June (late Jeyt or early Ásár) and ceases about the first week of October. Its normal duration is nearly four months—Ásár, Srávan, Bhádra, and the greater part of Áswin, but in some years, like 1887, it begins earlier, and in others like the last (1888) later than the date named above. Last year the first monsoon shower fell on the 27th of June, that is, about a fortnight later than the usual date of its appearance, and the year preceding the last was characterized by an extraordinary down-pour of rain as early as the 27th of May. The rainy season is equally irregular in its close. In some years the rains do not cease till the end of October, and in others they are off long before the beginning of October. The last monsoon shower of 1888 fell on the 21st of September, since which time little or no rain fell for a continuous period of over three months.

The cold weather commences at the end of the rainy season, and lasts up to the end of Fálgun (middle of March). Its normal duration is five months (Kártic, Augraháyan or Aughrán, Paus, Mágh, and Fálgun), but it varies according as the rainy season closes earlier or later than its normal date (the end of Áswin). The temperature irregularly rises and falls towards the latter part of winter, which thus gradually passes into the hot weather. There is no sharp line of division between the two seasons; the period of the close of the one and the commencement of the other cannot therefore be accurately stated.

The hot weather may be said to commence with Cheyt (middle of March) and to extend to the commencement of the rainy season. The normal duration is three months—Chaitra or Cheyt, Baisák and Jaishtha or Jeyt. Its duration increases or decreases according as the monsoon bursts later or earlier than its normal date.

Each of these seasons will be treated below in respect of its two most important aspects—temperature and rainfall.

Temperature.—The climate of the table land of Chutiá Nágpur is from its elevation much cooler than that of the surrounding plains. During winter

the maximum temperature seldom exceeds 80°F., excepting towards its close, while the minimum often falls as low as the freezing point. Hoar frosts are common, especially in the western portion of the subdivision in the months of Paus and Mágh (December, January and February). The following shows the mean temperature at 10 A.M. of each of the winter months for the year 1887. Last three weeks of October 81·9°F.; November 78·3°; December 73·3°; January 71·2°; February 77·8°; first half of March 89·7°.

In the hot weather the thermometer frequently rises to 104·0° in the shade, and occasionally even higher. At night, radiation is equally active owing to the dryness of the atmosphere, and the temperature usually falls below 60°F. The following are the mean temperatures at 10 A.M of the hot weather months for the year 1887. Last half of March 90·3°; April 96·2°; May 97·8°; first half of June 94·0°.

The appearance of the monsoon causes a sudden falling off of the temperature which has been ranging high in the previous months. The following are the mean temperatures at 10 A.M of the rainy months for the year 1887, last half of June 86·4°; July 84·1°; August 83·3°; September 84·6°; first week of October 85·7°. On comparing these means with those for the hot weather months, it will be observed that the rainy season stands midway between the winter and the hot weather in respect of temperature.

Rainfall.—The original people of the country, the Kols, have no weather aphorisms which can furnish us with a knowledge of the time when, and the reasons for which rain is wanted. The conditions of the agriculture of Chutiá Nágpur Proper being somewhat different from those of Behar, those in use in the latter country are not applicable here in their entirety, and only those among the Behar weather proverbs which are found to hold good in Chutiá Nágpur are used in ordinary parlance by Behari settlers. These will be mentioned while treating of the rainfall of each particular month.

In Mágh (January February) one or two good showers are wanted to soften the soil for ploughing for upland paddy nurseries, upland paddy, and the other *bhadoi* crops In the winter months the soil gets baked up, and the clay soils get particularly dry and hard, so that, unless they are softened down by a shower, they cannot be broken up by the plough In this respect the Bengal and Behar proverb applies to, and is actually used in Chutiá Nágpur—"Jadi barse Mágh ká sesh, dhanya se rájá, dhanya se desh," *i.e.*, "if it rains about the end of Mágh, blessed are the land and the king thereof."

In Fálgun (February-March) one shower is enough, much rain being injurious, as it encourages the growth of grasses in the paddy-fields In fact, in this and the following two months of Cheyt and Bysákh, ráyats wish for dry hot weather, in order that grasses and other weeds may be burnt up. Besides heat is believed to impart fertility to the soil, as it no doubt does by setting free its manurial ingredients. It is further believed that rain in Cheyt brings on drought in Bhádra, and conversely a rainless Cheyt is sure to be followed by a wet Bhádra. This belief has given rise to the aphorism "Cheyt me láge bán, Bhádra me kare tán," *i.e.*, "if it rains in Cheyt, it gets dry in Bhádra." This fact remains to be verified by meteorologists.

Rain in the latter part of Fálgun and in Cheyt can do little or no good; on the other hand, it is disastrous to *máhuá*, which is the only harvest during the hot weather months. Hailstones are particularly feared, as they usually occur at the approach of the south-west monsoon, and cause incalculable damage to the *máhuá* crop.

The ráyats wish the rains to commence in early Joyt. During this, and the three following months of Ásár, Srávan and Bhádra, they should be frequent and abundant. Continuous rain for a long period like a week or fortnight causes some amount of injury to the *bhadoi* crops (and among these to maize and *márua* in particular) by pressing down the soil which becomes close and does not allow the roots to spread about. The injury from this cause is never, however, so great in Chutiá Nágpur as elsewhere, the upland soils being light and the natural drainage of the country exceptionally good.

Much rain in Srávan is good for upland paddy, and in Bhádra for lowland paddy, these two months being, respectively, the time for their greatest growth. This fact is embodied in the following aphorism:—Srávan garje gorá upje; Bhádo garje don upje."

The rainy season should continue up till the end of the first week of Áswin. During the rest of Áswin and Kártic, occasional showers at intervals of a fortnight or so are all that is wanted. "Kanyá kane kán," *i.e.*, "ear-deep rain in Áswin," and "Biná bái tulá barse, kánhá rákhega dhán," *i.e.*, "if there be rain without wind in Kártic, where shall I keep my paddy," are proverbs which I have heard said by some Hindu settlers. The ráyats, however, do not wish for much rain in Áswin. The second proverb holds true of Chutiá Nágpur as of every other rice-growing country. A stormy Kartic will do incalculable injury to the standing paddy by laying it flat and blowing away the grains.

Augraháyan or Aughrán should be a rainless month, as it will in many ways injure the paddy now ripe for the harvest. There is no weather proverb for this month.

In Paus no rain is wanted. This arises from the fact that there is no *rabi* crop which can be benefited by rain; on the other hand, it is always accompanied by excessive cold, which, together with wet weather, causes a considerable amount of mortality among cattle, which in Chutiá Nágpur depend almost entirely on out-door feeding. It is therefore said—"jadi barse paushe, rájya jái nashe," *i.e.*, "if it rains in Paus, kingdoms go to ruin."

The Chutiá Nágpur proverb for Paus is just the reverse of the Bengali proverb "jadi barshe paushe, táká hai tushe," *i.e.*, "if it rains in Pous, paddy brings money."

The following statement summarises what has been previously said respecting rainfall, and shows whether and how much rain is wanted in each month of the year:—

Period (vernacular).	Period (English).	Quantity of rain.	REMARKS.
Mágh ...	January-February	One or two showers at the latter part of the month.	For softening soil for ploughing for paddy, paddy nurseries, and *bhadoi* crops.
Fálgun ...	February-March	One shower in the beginning.	For softening soil for ploughing for paddy, paddy nurseries and *bhadoi* crops Hailstones cause injury to *máhuá* buds.
Cheyt ...	March-May	No rain ...	Dry heat is wanted to burn up weeds. Rain injures *máhuá*.
Baisák .			
Jeyt ...	May-September (3rd quarter).	Copious rain better at short intervals.	For all the *bhadoi* crops and low land paddy.
Ásár ...			
Srávan ...			
Bhádra			
Áswin (1st quarter)			
Áswin (rest of)	October (4th quarter)-November	Occasional showers ..	For low land paddy. Too much rain in Kártic is injurious to paddy.
Kártic ..			
Augraháyan ...	November-December.	No rain ...	Rain is extremely injurious to paddy and cotton.
Paus ...	December-January	Ditto ...	No benefit from rain, but great injury to cattle.

The following table showing the mean rainfall of each month for the ten years ending with 1888 may be considered as representing the amount and distribution of rainfall in a normal year:—

Table of mean rainfall for 10 *years*, 1879-88.

Months.	Number of rainy days	Quantity of rainfall in inches
January	2	0·52
February	2	0 62
March	4	1 19
April	2	0 32
May	6	4 19
June	15	9 28
July	23	15 55
August	21	14 48
September	15	8·58
October	5	2 38
November	1	0·54
December	1	0·40
Total ...	97	58·05

From the above table it appears that the average number of rainy days in Chutiá Nágpur Proper is 97, and the average annual rainfall 58·05 inches. The table ought to give us also a clue whereby we can judge of the distribution and sufficiency or otherwise of rainfall in any particular year. Thus taking the agricultural year 1888-89, we find that both in respect of quantity or distribution the rainfall of the year has been very unfavourable to the *kharif* and *rabi* crops. The following statement shows the number of rainy days and quantity of rainfall from April 1888 to January 1889:—

		Rainfall of 1888-89.	Average rainfall.	Number of rainy days of 1888-89.	Average number of rainy days.
April	1888	0·00	0 32	0	2
May	"	2 57	4·19	4	6
June	"	3·05	9 28	7	15
July	"	18 98	15 55	22	23
August	"	20·70	14 48	24	21
September	"	7 88	8 58	12	15
October	"	0·35	2·38	2	5
November	"	0 12	0 54	1	1
December	"	0 00	0·40	...	1
January	1889	0 00	0 52	...	2

Contrasting the figures for the year with the corresponding averages, it appears that in the earlier part of the agricultural year (April, May and June) the quantity of rain was much less (5·62 against 13·79), and the number of rainy days much fewer (11 against 23) than the average. The consequence was that the sowing of paddy and *bhadoi* crops was delayed, and the paddy nurseries, which had been sown after the first showers of rain in May, were largely injured by the prolonged drought in June. The deficiency of rain was made up by an abundant downpour of rain in July, August, and the first three weeks of September. During these months, however, any excess of rain could do no good; on the other hand, too much rain might, as indeed it did, prejudicially affect the *bhadoi* crops. The last shower of rain fell on the 20th September, and was followed by a long drought, which continued practically uninterrupted till the 18th of February, that is, for exactly five months. Some rain fell indeed in October and November, but the quantity was barely one-sixth of the average rainfall during those months. Neither was the fall general all over the country. The consequence was fatal to autumn paddy, and in a less degree to winter paddy, while the *rabi* crops, little as they are grown in the sub-division, could not be sown on account of the absolute withholding of rain during Áswin and Kártic,—the months in which *rabi* lands have to be ploughed and sown.

There are only three meteorological stations in the sub-division, viz., Ránchí, Lohárdagá and Sillí. The Ránchí observatory was established in 1884; previous to that time only rainfall used to be recorded at the Ránchí Jail. The following observations are daily recorded at the observatory:—Rainfall, temperature maximum and minimum, wind direction, barometric pressure, cloud proportions. The observations are sent daily to the Meteorological Reporter, Bengal, and weekly totals of rainfall are supplied to the district office. At the other two stations (Sillí and Lohárdagá) only rain-gauges are kept, and the rainfalls are recorded by the local postmasters under the supervision of the Inspector of Post-offices of the Házáribágh Division. The daily recordings are sent direct to the Meteorological Office.

In order that it may be in possession of the exact state of cultivation in every part of the district, and considering that it often happens that while one part of a district is enjoying plenty of rain, another is suffering from drought, it is desirable that the number of rain-recording stations be multiplied. This end can be easily achieved by providing each police-station and outpost with a rain-gauge, and asking the police officer in charge to send weekly reports of rainfall direct to the district office. Police officers are constantly called upon to supply information on various matters relating to cultivation; a rain-gauge will greatly assist them in ascertaining the rainfall in their jurisdiction with much greater certainty than if they were to depend on their bare judgment and the hearsay information of chowkidars and other illiterate parties.

Besides the three stations named above, many of the tea-planters record rainfall for their own information These gentlemen can be also easily induced, I believe, to supply the district office with rainfall statistics, and thereby enable the authorities to ascertain rainfall in localities hitherto left unprovided with rain-gauges.

SECTION 2.—*Soils.*

The village lands are primarily distinguished into two classes, viz., *don* or terraced low lands, and *tánr* or uplands. Each of these classes will be treated separately in respect of soils.

The low lands.—The low lands occupy the hollows intervening between contiguous ridges of uplands, and are covered with rice. Those in the bottom of the hollows are known as *gárhá* or deep *don*, and those higher up the sides of the hollows are known as *chaunrá* or high-lying *don*. In the Five Parganás, *gárhá* and *chaunrá dons* are, respectively, called *bahál* and *bádh*. The low lands are dug out into perfectly level terraces lying above one another and looking like so many steps of a staircase. Each terrace is enclosed by embankments on three sides (the fourth side being flanked by the embankment of the next higher terrace) in order to retain sufficient depth of water for the growth of rice. The *gárhá* lands from their low position retain moisture for a considerable time after the rains have ceased, and are not therefore so much affected by drought as the *chaunrá don*. This latter being situated at higher level quickly dries up, and is extremely subject to drought.

Gárhá don lands, which remain perpetually wet on account of some riverlet or the water of a *dári* or spring flowing over them, are distinguished as *kudr*. Such lands are very valuable, as they can yield two harvests in the year, viz., one of *kharif* rice in Augraháyan, and the other of *tewán* or summer rice in Bysákh. Besides they are never affected by drought.

Gárhá lands situated between two close ridges of uplands covered with jungle are known as *sokrá*. They receive the washings of the jungles to which they largely owe their fertility.

The different classes of soils met with in *don* lands, and their respective characteristics, are given below:—

(1) *Nágrá*—Is a strong sticky clay soil. There are several varieties, black, red, and white or light coloured The black variety is rich in organic matter, and is only inferior to alluvial soil or *pánkuá*. The other varieties are considered much inferior. Inferior soils are collectively known as *gariá* soils. The chief characteristic of *nágrá* soils is their liability to crack up into large blocks on getting dry. By cracking, the soil becomes more exposed to heat, and thus dry up the quicker, while the roots of the rice plants get torn up. *Nágrá* soils, although naturally fertile, are thus liable to great injury from drought. *Nágrá* soils are sometimes called *kewál*, and in the Five Parganás spoken of as *chite*.

(2) *Khirsi*—Is a loam containing equal proportions of clay and sand. It does not crack up like *nágrá*, and is more retentive of moisture.

(3) *Báloor* or *bálsoondar*—Is a poor sandy loam, occurring as a rule in *chaunrá don*

(4) *Rugri* or gravelly soil.—This is rarely found in *don* lands, and is of very inferior quality.

(5) Alluvial soil or *pánkuá*.—This is by far the most productive of all soils, but is conspicuous by its absence on the plateau of Chutiá Nágpur. In the Five Parganás which lie below the plateau, alluvial soil is occasionally met with in river banks and on lands over which the water of a reservior is allowed to flow.

The first three (*nágrá*, *khirsi* and *báloor*) are the prevailing soils in the *don* lands. In some villages *nágrá*, in others *khirsi*, is the predominant soil of the lower rice-fields (*gárhá don*). In the higher rice-fields (*chaunrá don*) *báloor* and *khirsi* are found more abundantly than *nágrá*. In other words, the lower is the situation of the rice-field, the more clay it is likely to have in its composition,—a circumstance which can be explained by the fact that clay being finer than sand is washed down to lower levels, while the heavier particles of sand are left higher up.

The uplands.—The village uplands are distinguished into the following :—

(1) *Bári* or homestead, which comprises small plots of land immediately around the houses. Each *bári* or homestead plot includes a few cottahs of land. It is invariably fenced in by a high paling of sticks, and occasionally enclosed by mud walls. *Bári* lands are usually the most fertile uplands in the village. They are used to grow maize, tobacco, various vegetables, and crops which require special labour and care.

(2). *Dihári tánr* which comprises lands immediately adjoining the homestead, and is in fact that portion of the village site which remains unoccupied by homesteads. They are often enclosed by trenches to prevent aggressions of the village cattle. On these only the valuable among the *bhadoi* crops *e.g.*, *barai* (*Phaseolus mungo*) and *máruá* (*Eleusine corocana*), the *burhiá* variety of cotton, and the *rábi* crops are grown. Portions of *dihári tánr* on which rice nurseries are usually made are called *cheerá* or *birá bári*. After the seedlings have been taken off, some *rabi* crops are grown on such lands.

Dihári lands are next to *bári* in point of fertility. Like the latter *dihári* is benefited by the fertilizing influence of the *basti ká páni*, or washings of the homestead.

(3) *Tánr* or *dánr* are the outlying uplands lying furthest from the village site. Such lands are usually spoken of as *tánr*, although the name applies, generally speaking, to the whole of the uplands. *Tánr* lands are cropped with upland rice, *máruá*, *gondli*, *urid*, *kurthi* and *sargujá*, namely, those *bhadoi* crops which are grown with little labour.

When the drainage of the higher uplands flows over a portion of *tánr* land, the latter is known as *táriá*. *Táriá* lands are enclosed on the lower sides by temporary embankments in the manner of *don* land, and are cropped with the earlier and lighter varieties of *don* rice, *e.g.*, *karháni*, *álsungá*, *karángá*, &c.

The prevailing soils in the uplands are :—

(1) *Lálmáti*, a red ferruginous sandy loam formed from the disintegration of laterite, which, together with gneiss and cognate rocks, form the superficial grology of Chutiá Nágpur. It is a poor loose soil, and without much manuring will produce but little. The chemical composition of this soil will be treated later on.

(2) *Bálá*, or a very sandy loam, extremely loose in texture, poorer even than *lálmáti*. It is distinguished from the *lálmáti* in having less clay in its composition.

Besides the above, which may be considered as characteristic of the uplands, the following soils are occasionally met with :—

(3) *Rugri*, or gravelly soil.—It occurs abundantly in villages situated at the foot of hills, and in places where laterite beds come up near the surface of the ground. *Rugri* is difficult of cultivation, and being loose in character like *lálmáti* and *bálá*, cannot retain manure or moisture for a sufficiently long time.

(4) *Nágrá*, *Chite* or *Kewál*, as it is variously called, is the same soil as in *don* lands (*vide supra*). *Nágrá* or strong clay soils are not commonly met with in uplands in Chutiá Nágpur, but are abundant in Tori and the Five Parganás. They are far superior to any of the soils named above.

(5) *Khirsi* or loam.—The amount of *khirsi* upland like *nágrá* is also very limited.

(6) *Pánkuá* or Alluvial soil. Alluvial lands cannot be properly called uplands, although when found on the banks of rivers they are cropped with the upland *rabi* crops, *e.g.*, mustard, wheat, barley, tobacco, and, if sufficiently high, with sugarcane.

The upland soils are poor in quality. In *bári* and *dihári* lands, which remain naturally manured by receiving the fertilizing wash of the homesteads, they are annually cultivated, but the outlying fields do not always admit of being annually cropped. They are consequently left fallow at intervals to recoup their strength. In the southern parganás (Sonpur, Bassiá, &c.) the character of the uplands becomes more sandy, and if the outlying fields which usually occupy the slope, and are more subject to wash, are cultivated for two or three successive seasons, they become alsolutely barren owing to the earthy matter being washed away, leaving little else but sand. It is also for this reason that in many places *tánr* lands are allowed to be permanently fallow, and serve as pasture for the village cattle.

Geological origin of the soils.—It has already been mentioned in the section on geology that Chutiá Nágpur Proper rests on igneous rocks which are overlaid in some places with laterite gravel. It is to these that we should mainly look for the origin of the soils. The laterite gravel is composed of ferruginous sand plentifully intermixed with siliceous nodules which soon weather up under atmospheric influences. The fused appearance of the nodules points to

the igneous origin of laterite. Soils derived from laterite are deficient in many important ingredients among others in lime and nitrogen, and have a barren appearance, supporting little natural vegetation. Gneiss is composed of three mineral constituents, viz., quartz, mica and felspar. The first by its decomposition furnishes sand, and beyond contributing to the bulk of the soil, is of no other importance. Mica is very hard to decompose, and is found in the from of minute sparkling specks in most of the upland soils. It is felspar which by its decomposition supplies potash and most other mineral constituents of the soils. Clay being much finer than sand has been naturally washed down to the lowlands, while the heavier sand has been left on the uplands. This explains why the lowland soils contain more clay than the upland soils, which in Chutiá Nágpur may be characterized as little more than sand.

Soils derived from gneiss or other rocks similar in composition to gneiss are naturally rich in *potash*, but extremely poor in *lime*. This will be verified by the only analysis of soil of Chutiá Nágpur that I could get, and which will be reproduced in a subsequent paragraph. The proportion of phosphoric acid in the soils is likely to be small, as granitic rocks contain little of mineral phosphates, unless where they are broken through by trap and basalt (as is the case in many places) which are known to be rich in phosphatic minerals.

There is also a like deficiency of humus in the soils in the well cultivated portions of the country ; but in jungly parts the forests supply a great deal of vegetable matter. There in consequence the soils look much darker than those in the opener parts of the country. The presence or absence of humus is a strong indication as to whether the soil is rich or poor in nitrogenous matter, which together with potash, lime and phosphoric acid are the constituents which determine its fertility.

The following is the analysis of an upland soil from the Hotwár tea garden, four miles from Ránchi. The soil was the red ferruginous loam (*lálmáti*), which is the characteristic soil of the uplands:—

	Per cent.
Siliceous disintegrated rock, containing about five per cent. of earth matter, chiefly alumina, oxide of iron with a little admixture of potash and trace of lime	85·680
Alumina	4·860
Peroxide of iron	4·450
Lime	0·683
Manganese	0·805
Potash	0·319
Soda	0·023
Phospheric acid	0·016
Oxide of manganese	0·060
Loss of water and carbonic acid	3·104
	100·000

The above analysis will be better understood by considering it along with the following figures, which represent the minimum proportion of each manurial element in a well-balanced soil :—

	Per cent.
Potash	0·2
Phospheric acid	0·2
Lime	1·0
Organic matter	4·0

Comparing these figures with those of the analysis, we find that the soil in question has a plentiful stock of potash, but suffers from a great deficiency of lime and organic matter, and to a smaller extent of phosphoric acid. The same conclusion was arrived at from an *à priori* consideration of the geological origin of the soils of Chutiá Nágpur.

In regard to the fertility of the soil, the circumstances which tend to diminish it, and the steps necessary to improve its quality, I beg to refer to my remarks in the section on manures (page 39).

SECTION 3.—*Manures.*

The following are the different classes of manures used by the people :—

(1) Cowdung.
(2) Ashes.
(3) Mud from old tanks
(4) Karanj flowers and cake.
(5) Scrapings of *báthána* or places where cows are herded at night.

Each of these will be separately treated in the following paragraphs.

(1) *Cowdung.*—Although I have given above a list of five different kinds of manures, yet only two out of them, viz. cowdung and ashes, are the most important, and, generally speaking, the only manures which the ráyats know and habitually make use of to enrich their fields. Every ráyat has a manure pit close by his homestead, in which are thrown the cleanings of the cattle shed and every manner of refuse of his household. Ashes are usually thrown into the same heap, but careful cultivators keep them in a separate place. The manure pit is sufficiently hollow to prevent the washing away of the manure by a heavy shower of rain.

Among the commonly cultivated crops, those which receive the largest proportion of manure are broadcasted lowland paddy, paddy nurseries, *máruá* (a cereal), *urid* (a pulse) and cotton. *Sargujá* (oilseed), *kurthí* (pulse), *gondlí* (cereal) and *gorá* or upland paddy are never manured; the latter (*gorá*) receives, however, an occasional dressing in the Five Parganás. The usual time for applying manure to fields intended for upland paddy nursery, broadcasted lowland paddy, *máruá*, *urid* and cotton is Fálgun, and Cheyt, commonly as a matter of custom after the festival of Sarhul. Lowland paddy nursery is manured in Ásár. In many parts of Nágpur the manure heap is set fire to previous to its application, and the more or less carbonized stuff is applied to the fields. The motive for what would otherwise appear as a most wasteful method of conserving manure, is the destruction of grass-seeds which invariably remain in cowdung, and if not destroyed by burning would do great damage by overpowering the growing crops The practice of burning is not known in the Five Parganás, the reason for its non-existence probably being that the land is very fertile, and the young crops sown become strong enough to keep the weeds in check. Old cowdung is always preferred to new, and is used for such delicate crops as *máruá* and upland paddy nursery specially for this reason, that the seeds of weeds have been more or less destroyed by decomposition in the former.

The supply of cowdung furnishes an agricultural problem of the first importance in this country. I will first state the general facts which bear on this problem. The fertility of the soil in the well-cultivated portion of the subdivision is being fast reduced to its permanent limit. This reduction of fertility is brought about by three circumstances, viz., (1) the continued cultivation of land without an adequate replacement of its manurial ingredients by the sufficient use of cowdung or other manures; (2) the spread of cultivation which, reducing the quantity of forests and pasture land, and thereby the number of cattle, causes a falling off of the total quantity of manure, and as a larger area requires to be manured, still further reduces the quantity available for any particular area of land; and (3) the prevalence of cattle epidemics, which have of late years carried off a large proportion of the cattle in the country, and thereby reduced the supply of manure. This last cause, *i.e.*, cattle epidemics, is a matter of general complaint all over the country, and must not be taken as too imaginary to deserve notice. Regarding the cause of the prevalence of cattle epidemics, and their effect on the agriculture of the country, (*vide* page 90, on cattle plagues.)

With the spread of cultivation and the rapid disafforestment of the country, the ráyat has been brought face to face against many agricultural difficulties which he is yet too ignorant to contend against. One of these is an adequate supply of manure for his fields. In the well-cultivated portions of the plateau there are few cattle beyond those which are indispensible for the cultivation of land. The supply of manures in these parts is extremely limited. A pair of oxen can produce at the outside 2 tons of manure in the year, it being considered that only half the manure is dropped in the cowshed

in which they are lodged at night. This quantity must suffice for a plough area of land, which may be taken at 5 acres of lowland and 5 acres of upland on the average. What is therefore done is to manure only one-half of the lowlands, that which is intended for sown paddy, and about a quarter or fifth of the uplands, which is reserved for *máruá*. The lowlands therefore get a dressing once in two years, and the uplands once in four or five years. Calculating on this basis, there are 3½ acres of land which have to be manured with the 2 tons of manure produced by the cultivator's oxen. If it be required to carry the calculation any further, it may be shown that from this plough area about 2¼ tons of grain and about 13 cwt. of straw are annually carried off in the form of produce.* The insufficiency of manurial supply can be easily guessed, considering the difference in manurial value between this annual loss and the meagre supply of manure which is to make up for such loss. The quality of the manure produced by the cultivator's oxen cannot be good, as the latter are exclusively fed on coarse grass and straw, receiving no oilcakes or grain, which alone can add richness to the manure. The quality is further deteriorated by the practice of burning dried dung as fuel, which thus loses the total amount of its nitrogenous ingredients, and of burning the manure heap for fear of weeds. In the central parganás the deficiency of manure is so much felt that it is a common practice with the careful Hindu cultivators to regularly collect dung on pasture lands and roads frequented by cattle, and thereby increase the bulk of their manure heaps. The practice is good, so far as it enriches the fields of those who collect the dung, but it defeats one main object of letting land fallow, which is its enrichment by dung dropped by cattle grazing on it.

In respect of the supply of manure, the people of jungly villages are well off. There land is naturally more fertile, and requires less manure than in the central parts of the country: the number of cattle, and therefore the absolute supply of manure, are also larger. The difficulty of providing sufficient supply of manure is not felt so long as there is jungle in the neighbourhood.

As a rule manure is seldom bought or sold. In the country about Ránchi, where the number of cattle is comparatively very small, owing to want of sufficient pasture, cowdung has become a marketable commodity, being sold at the rate of 2 pice per *banghy* load, and 2 to 4 annas per *sagar* load. The same I have found to be the case in a few other places like the town of Lohárdagá, but with these few exceptions nowhere else the ráyat ever thinks of spending money on manure, nor can he get any, even if he wishes to pay for it.

(2) *Ashes.*—As a rule these are thrown into the general manure heap. A few ráyats, however, keep the ashes in a separate place. The supply of ashes depends on the consumption of fuel by the ráyat's family. When ashes are kept separate from dung, they are used specially for *urid*, cotton and potatoes, all of which show a considerable proportion of ash constituents in their chemical composition. The ráyat's stock of ashes is further increased by the leaves of mango, *máhuá*, *karanj* and various other trees, which fall off abundantly before the spring, being collected and burnt down in heaps into ashes. The collection of leaves is usually the duty of the women and girls; and it is a striking sight in April and May to see groups of women and girls busily engaged in brushing off the ground every bit of dry vegetable matter they may lay their hands on.

The use of ashes is peculiar to the *dáhá* system of cultivation which prevails in jungly tracts. According to this system, cotton and other crops, such as paddy and *máruá* nurseries, and upland paddy, are raised by manuring the land with the ashes of trees cut down in the jungles. These are first spread in a thick layer over the ground, and when dry burnt down to ashes.

(3) *Mud of old silted up tanks.*—This manure is rarely used by the people. It is rich in vegetable and cinereal constituents, and must be thoroughly

---

	Grain. Mds.	Straw. Mds.
5 acres lowland paddy	45	15
1 acre upland paddy	5	2
1 „ máruá	3½	...
1 „ gondli	3½	1
1 „ urid	3	...
1 „ sargujá	2	...
	62	18
Total	= 2¼ tons	= 13 cwt.

exposed before use, as it very often contains ferruginous and organic compounds, which, unless oxidized by exposure, may prove injurious to crops. In the Five Parganás mud is usually used for tobacco and sugarcane lands.

(4) *Koranj flowers and cake* (*Pongamia glabra*).—The flowers are considered to be a very forcing manure; but their supply and use are limited. The flowers are used on paddy land, which has somehow deteriorated in quality. I am unable to give the composition of the flowers, but it is worth while to have a few specimens chemically analysed. Karanj cake, after the oil has been expressed from the seed, is also considered to be a very good manure for paddy nurseries; and as the cake, like karanj flowers and its oil, is poisonous to man and cattle, it is used for manuring the seed lands, wherever it is procurable.

(5) The scrapings of *báthán* or place where cattle are herded at night by the *áhirs* are used as manure, though very rarely. The scrapings of cow-sheds, &c., are never used by the people, as they are in many parts of Bengal, for sugarcane lands.

Green manuring.—The principle of green manuring is well understood by the people. Ráyats like to see a plentiful growth of grasses on their paddy stubble, for grass, as they say, is nothing but manure. They do not, however, wish to see all kinds of grasses growing on the stubble on account of the difficulty which many of them cause in weeding them out. The most favourite grass which the ráyat wishes to see on his dhán lands is *sáwán*, the wild form of the cultivated variety of *Panicum miliaccum*. All other grasses are carefully weeded out in Srávan, but *sáwán* is fostered till *bidháli*, when the rice land is ploughed and harrowed with a view to destroy the grasses. The *sáwán* thus gets easily destroyed, and being decomposed in the soil gives up its manurial constituents to the growing paddy. The manurial value of *sáwán* cannot be much greater than that of other grasses; but its use as a green manure depends on the fact that, unlike other grasses, it gets easily destroyed whenever wanted. In the Five Parganás ráyats often grow *sáwán* along with sown paddy with a view to restore fertility to any land which is believed to have deteriorated through exhaustion. A few ounces of the seed of *sáwán* are sown along with paddy in Jeyt-Ásár, and the two crops are allowed to grow till the time for *bidháli* comes in Srávan. By this time the *sáwán* has ripened; and the ripe grains are collected if desired by simply shaking the blades. The *bidháli* is then given by which the *sáwán* gets buried in and destroyed. This practice, so far as my enquiry goes, is not known in Nágpur, *i.e.*, on the plateau of Chutiá Nágpur. Here, however a somewhat different method of utilizing *sáwán* for manuring *tánr* land exists. *Sáwán* is grown for one year, and harvested, after which the long stubble is buried in by a ploughing. The soil thus gets effectively manured, and yields a good crop of *gorá* or upland paddy in the next season.

Cowdung being almost the only manure used in the country, the problem is how to economize its supply. First with regard to conservation of manure, it may be admitted that a certain portion is washed away, but such loss is, in my opinion, unavoidable The method of conservation in this country is not much inferior to what prevails in countries where the science of manures is far better understood In the second place, much loss is incurred by the practice of burning dung as fuel in the absence of wood. This loss is to be attributed to the most improvident and reckless denudation of forests in many parts of the country. A well-planned system of conserving forests is likely to reduce this item of the loss of manure. Everywhere the ráyats attach the utmost importance to the accumulation of manure, and will not wilfully waste any if they can help it. The mass of the people are too poor to afford to buy fuel. Any improvement under this head of burning dung as fuel cannot be expected until fuel is rendered cheap and accessible by a compulsory system of conserving forests, or until the ráyats become rich enough to afford to buy fuel at the comparatively high prices at which it is now sold in certain parts of the country. Under the existing circumstances, I cannot think of any means by which the present supply of manure can be better economized. It is possible, however, to increase the supply by inducing the ráyats, through example and precept, to reserve a certain portion of their cultivation for growing fodder. The number of cattle, and with it the supply of manure, can thus be increased. The practical difficulties, however, in the matter of reserving land for pasture are however very great, and will be dealt with in the sections on fodder supply and improvement of cattle-breeds.

The use of oil-cakes, not to say bonemeal and other artificial manures, is wholly unknown in Chutiá Nágpur. Efforts may be made to induce ráyats to take to some of the artificial manures, among which oil-cakes and bonemeal appear to me to be the most promising, as both of them are locally available. The supply of oil-cakes is comparatively limited in Chutiá Nágpur, the bulk of the people using little oil in cooking. This is so much the case that oil-cakes are rarely used for feeding cattle. But it may be reasonably hoped that any demand for oil-cakes as manure will be promptly met by importations from the neighbouring districts.

If the manurial value of bonemeal be well-demonstrated to the people, the latter can be easily induced to take to its use, as the Kols, who form the bulk of the ráyats, do not labour under the same prejudice as the Hindus in respect of the use of bones. Bonemeal is calculated to furnish all the important constituents of the soil, and will partly make up for the deficiency of nitrogen and lime which characterizes the soils of Chutiá Nágpur. I believe a dressing of lime is likely to add tone to them. This, however, remains to be tested by experiment.

SECTION 4.—*Irrigation.*

The practice of irrigation is practically absent from the arable husbandry of Chutiá Nágpur Proper. Tobacco and sugarcane in the Five Parganás and various vegetables raised by the Koeries are, generally speaking, the only crops which receive any irrigation. The various sources of water available for irrigation are treated below in order of importance.

(1) *Wells.*—The number of irrigation-wells in the country is small, and these are exclusively owned by the Koeries and others whose profession is the raising of vegetables for the market. The cultivation of vegetables is confined only to the large villages where the Koeries have settled. The Koeries profess to have come from Magadh or Gayá, and brought with them the knowledge of irrigation to the country. Among the dry season vegetables raised by irrigation, the most important are potatoes, onions, garlics, chillies, brinjals, radishes, and various herbs or *ságs.*

Most of the wells are from 4 to 6 fathoms deep. The actual depth at which water always remains in a well depends on the altitude of its position above the low lands, and on its proximity to rivers or tanks. There are two classes of wells, viz. *pukka, i.e.*, lined with stones or bricks, and *kutcha, i.e.*, without any such lining. A pukka well about 4 fathoms deep and 6 feet across, if lined with bricks through its entire depth, may cost from Rs. 80 to Rs. 100. Such a well would last for an indefinite time. A kutcha well of the above dimensions, and dug through soil, may cost from Rs. 10 to Rs 15, but such a well does not last for more than two or three seasons, and is extremely liable to break down. The cost of digging a well is largely enhanced if it has to be dug through rock. An ordinary well of this nature may cost Rs. 100 and upwards. I have seen a well at Lohárdagá which has been made by cutting through rock for about 3 fathoms This well cost its owner nearly Rs. 800. Rock-cutting and the construction of embankments form the profession of a special caste, the *Nuniás;* but their services are not generally engaged unless the presence of rock prevents the progress of digging.

Well-water is availed of for irrigation for the eight months from Kártic to Jeyt. In the latter end of the dry season most irrigation wells afford a scanty supply of water. These can therefore be worked for only a few hours of the day, and are allowed to rest during the interval in which enough water filters in for the next day's irrigation. Many wells, however, get entirely dried up during Cheyt, Bysákh and Jeyt, so that such crops, as onions and chillies, which occupy the ground during these months cannot be grown with their help.

(2) *Tanks*—There are few tanks in the country, and those which exist are meant to supply drinking water. A favourite position for a tank is the top of a gentle slope which has been cut into terraces for rice fields. Such a tank partakes of the nature of a *bánd* or embankment, and the benefit which it confers on the lower rice lands will be dealt with in the succeeding paragraph.

I have met with but few instances in which tank-water has been used for irrigation, and in the only exceptions the circumstance which led to its use arose from the long drought of last year, which, commencing in September, lasted till the rice harvest was over. In these few cases the lower banks of the tanks were cut through and the water was led along *nálás* over the rice

fields. No other crop besides rice is ever irrigated with tank water, and the need for irrigating rice does not arise but once in the course of several years.

(3) *Embankments or bándhs.*—The number of these in the subdivision is extremely small, and those which exist are, like the tanks, meant mainly for the supply of drinking water. There are two classes of embankment-reservoirs:—(1) Those in which the embankments are thrown across the face of a natural depression between two ridges of upland. The annexed figure will show the plan of such an embankment.

FIG. I.

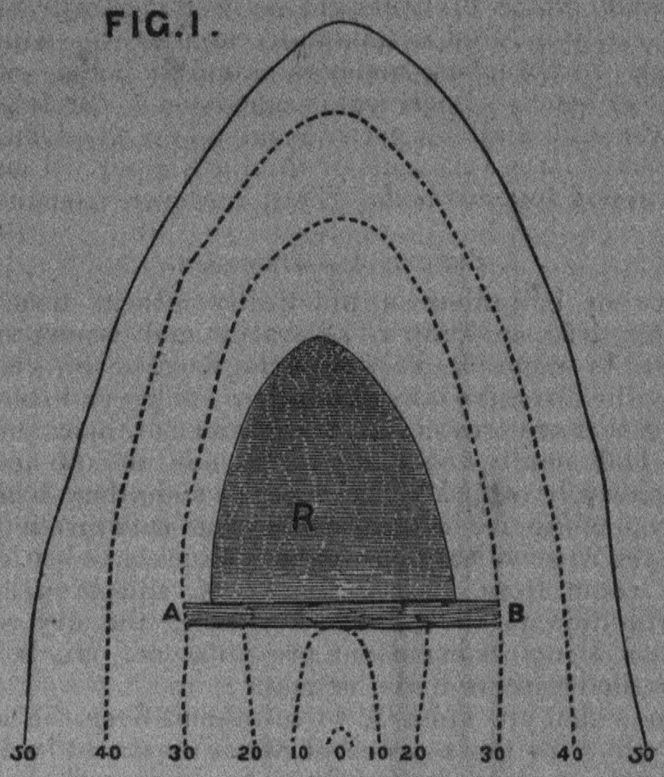

In the above diagram AB represents the embankment thrown up against a sloping depression, which is indicated by the different contour-line marks 0, 10, 20, 30, 40, 50. Almost the whole of the rain which falls on the rising ground above AB is caught by the embankment. This system of storing water is precisely the same as I described in my report on the agriculture of Brittany in the north-west of France, written in 1885, and since published by order of the Secretary of State for India.

(2) Those in which the embankments are thrown against the face of a stream, and serve to divert the whole or part of its water into an artificial channel leading to the fields. Such embankments are still fewer than those described in the first place. Small embankments are occasionally found serving to lead the water of hill-streams over the rice fields; but these are invariably of a temporary nature, and do not store water for use during the dry season.

The number of irrigation embankments in the country is very small, but where such exist, they are considered a boon to the people. Embankment-reservoirs become useful in many ways. In ordinary years the higher ends of the embankments are cut through or get naturally broken, and the stored water slowly percolates over the rice-terraces, which are thus kept full, although rain may not have fallen for several days. Their usefulness to rice is, however, largely enhanced in a year of drought in the latter end of the rainy season, as happened in the present year. In this year there has been no rain since the 20th of September, *i.e.*, during the months in which water is urgently wanted for the development and maturity of the rice crop. The consequent loss of the rice harvest has been great all over the subdivision, excepting in those villages (unhappily very few in number) which are blessed with embankments sufficiently large to spare water for irrigation. Among these I need quote only the instance of the large reservoir at Bundu. When the people of this and several neighbouring villages saw that their paddy was about to be destroyed by the unusually long drought of this year, they requested the owner to cut

through the embankment, and to let out the water over the fields which lay below. The ráyats agreed to pay him one *kát* or maund of paddy for every *kát* of land which was to be irrigated, and to repair any injuries that might happen to the embankment. The latter was accordingly cut through, and the water led over the rice fields to a distance of about 4 miles from the embankment. Not less than 200 acres of paddy were thus saved from the effects of the drought. To contrast the usefulness of an embankment with the deplorable results which follow in its absence, I beg to describe the miserable lot of the inhabitants of a group of villages in parganá Ráhe. A mile to the west of Ráhe there is a small rivulet which flows past the villages of Dokád and Cháinpur. At the point where the rivulet enters the village of Dokád, there used to be in recent years a large and high embankment, the remains of which are still to be seen on both banks of the stream. This embankment (still called the Rájbánd) was constructed by some former Rájá of Ráhe and used to be repaired by him and his descendants when necessary. The last Rájá of Ráhe having been a feudatory of the Mahárájá of Chutiá Nágpur, and left no male heir at his death, the estate was resumed some years ago by the latter. At the time of the survey and settlement of the *khálsá* villages of the Mahárájá, the Rájbánd was still in existence, and, diverting the water of the rivulet over the *don* lands of Dokád, Cháinpur, Basantapur and several other adjoining villages, gave them a degree of fertility much above the average. The fertility of the soil was further enhanced by fresh deposits of silt over the ground from the thick turbid water of the rivulet flowing over it. On account of their fertility, which were entirely due to the Rájbánd, the whole of the low-lands of Dokád and Cháinpur which are held khas by the Mahárájá were assessed as first class low land. To these rates the ráyats could have no reasonable objection, as the embankment enabled them to grow not only bumper crops of paddy, but wheat, barley, gram and other spring crops. The aspect of this village was, however, entirely changed when the Rájbánd, (which had not been repaired for some years back, the Rájá of Ráhe being gone, and the present owner, the Mahárájá, being too far to feel any direct interest in the matter) burst through, and the rivulet resumed its course along its old bed. I have gone over the low lands of both these villages, which in the absence of water appear to be as high and dry as *tánr*. The higher terraces have again been turned into tánr, although they are still paying rent at first class low-land rates. The rest are still cultivated as *don*, but their produce in a year of seasonable rainfall would be barely enough to justify a higher rate of rent than for third class low-land. In the present year of drought the condition of the low lands has been very pitiable. The mass of the low lands in the villages is what would be called *chaunrá* or high, getting quickly dry after rain has ceased. A large portion of these has been entirely lost, so that cattle were turned on them to eat it down, while the remainder yielded a scarcely 4-anna crop.

The above will convey an idea as to how a permanent reservoir of water, like a tank or one formed above an embankment, becomes useful to rice. It is, however, very rarely that ryots make use of them to grow spring crops, such as wheat, barley, gram, linseed and others. These crops, even when they are grown, are seldom irrigated.

(4) *Hill streams.*—There are numerous hill streams in the country, but the great majority of them, getting dry shortly after the rains, do not serve any useful purpose. A few are utilized to irrigate rice lands in the same way as I have described under embankments, and have been the means of saving rice from loss by drought. In the hilly country on the south side of the river Karkari in parganá Támár, numerous hill streams are found which, besides irrigating rice, enable the cultivators to raise such crops as tobacco, sugarcane, chillies, wheat, barley, and gram.

I have described above the various sources of water available for irrigation, and the manner in which and the extent to which they are at present utilized. The various crops which are irrigated, and the extent to which they are irrigated, are given below:—

(1) *Paddy.*—In very few villages there is any provision for irrigating rice in a season of drought. The two ways in which this important crop is benefited by an irrigation tank, embankment or hill stream have been described in the preceding paragraphs. In every case where irrigation is resorted to, the water is led over

the fields by gravitation. The use of the lever or the *siuni* is unknown in case of rice-irrigation.

(2) *Spring crops*, including wheat, barley, gram, linseed, &c. These are grown on *bári* land, and seldom receive any irrigation. Occasionally a single watering is given just before sowing. I have seen only a very few cultivators who are in the habit of regularly irrigating their wheat; but it is right to say in this place that these people are more intelligent and well-to-do than their neighbours.

(3) *Sugarcane.*—This is grown only in the Five Parganás. The water is lifted on to the field either by the *siuni* or the lever. When the river gets dry, a shallow well is dug in its bed close to the plantation, and the water is raised by the lever in the usual way.

(4) *Tobacco*—Is either grown on *bári* land or on alluvial deposits on river banks. In either case the plants are watered individually from a vessel.

(5) *Garden crops* raised by the Koeries, *i.e.*, potatoe, brinjal, chilli, onion, garlic, various green herbs, radishes, &c. These are plentifully irrigated with water from wells, which are invariable adjuncts of Koeri cultivation.

(6) *Pán or betel.*—This crop is reared only by a special caste of people, called the *Páneries*. The water of irrigation is taken from wells and raised by the lever.

Apparatus for raising water.—There are only two different apparatus for raising water, viz. the lever arrangement and the *siuni* or basket. The lever arrangement is the same as is found all over Behar and the North-West, and will be best understood from the following diagram :—

FIG. 2.

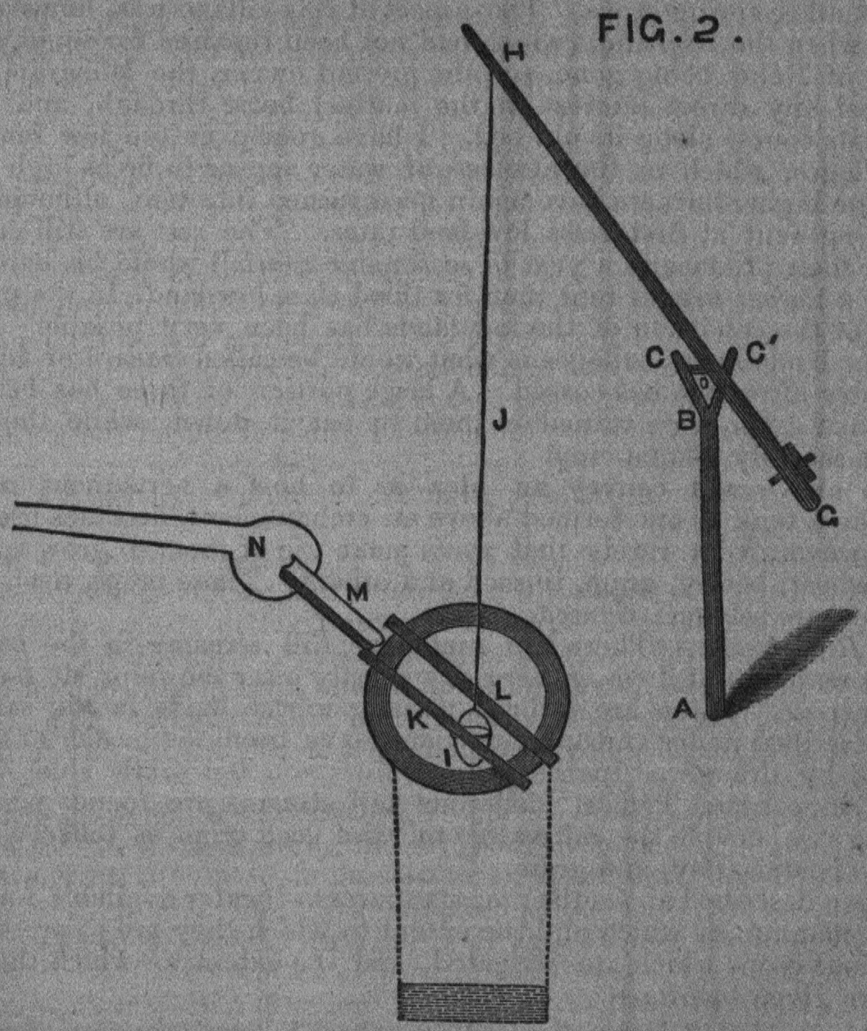

In the above diagram A B C C′ is the trunk of a sâl tree, about 10 feet high and 2 feet in girth at the bottom; it is naturally bi-forked into two prongs B C, B C′. A strip of wood is fixed by both its ends into B C and B C′: it serves as the fulcrum of a long lever G H made of the slender steam of a young

sal tree. The longer end O H is three or four times as long as the shorter arm O G. At the end of the longer arm is fastened a long rope, usually made of straw. This rope in its natural position reaches down to the mouth of the well. At its lower end is attached the bucket I. The rope and the bucket pass between two planks thrown across the mouth of the well: on these the lifter stands with his legs set apart, one on each of the planks. Only one plank is often made to serve the above purpose. M is a short hollow trunk of some tree, which is placed in a slightly inclined position. The water on being lifted is poured on to it from the bucket, and is then led away by the main channel N over the fields.

The longer arm O H, together with the rope and the bucket full of water, weighs slightly less than the thick short arm O G. If O G is not naturally heavier, it is made so by putting extra weight over it, *e.g.*, earth, wood, half of a sagar wheel, and all manner of odds and ends. The lifter, supporting himself on the planks K L, pulls down the rope till the bucket reaches the water level. On the bucket being filled up with water, the man holds the rope lightly; the heavier arm O G of the lever now coming down, the bucket comes up above the well; the lifter now lightly pushes over the bucket on to the near end of the hollow trunk K M into which the water is poured.

When quicker irrigation is wanted, two levers are erected, side by side, so that two men can work at the same time, independent of each other.

The price of the *khunti* or post A B C C′ and the latha or lever G H ranges from Re. 1 to Rs. 4. Besides these, the *kunri* or bucket, if of iron, costs from Re. 1-8 to Rs. 2; an earthen bucket will cost 3 pice Iron buckets are, however, in common use.

The quickness of irrigation depends on the depth of the water level in the well. The level of water in the majority of irrigation wells gets down to 3 or 4 fathoms below the surface during the latter end of the dry season. Many wells get entirely dry, or afford a scanty supply of water. A good well, one which will supply sufficient water for irrigation during the driest season, will irrigate one acre of land on the average. A man working for 10 hours at the lever can irrigate about ¼ of an acre, when water is reached at 3 fathoms; with a longer depth the amount of land irrigated in one day will be naturally less. Roundly speaking, one man will irrigate one acre in four days; and as an interval of 4—6 days is allowed between two successive irrigations of the same plot, one well will do for the irrigation of one acre, or a little more.

The second apparatus consists of a square bamboo basket, to the four corners of which are fastened four ropes. Two men stand, one on either bank of a narrow ditch into which the water is led from the reservoir; one of them holds the two ropes of one end of the basket, and the other those of the other. To begin with they fling down the basket into the water, and on its getting full, they raise it up by a swing over the channel which is to lead the water over the fields. At the same time that the basket or *siuni* is brought over the mouth of the channel, the men by a sudden pull at the two off-ropes incline the basket, which then gets emptied.

Water can be lifted by the *siuni* in the above manner to a height of some 6 feet; when it is wanted to raise water to a greater height, the lifting is done in two or more stages. From the water level in the reservoir, two men with one basket raise the water on to the first stage; from this latter another two men lift it to the second stage, and so on till the level of the channel is reached.

One *siuni* with two men to it can irrigate about one acre of land in a day. The cost of irrigation is, however, enhanced if the lifting has to be done in two or more stages.

Cost of irrigation.—There are only three ways in which fields are irrigated, viz. by gravitation, by means of the lever, and by means of the basket. From the following calculations the interest of capital outlay in the construction of embankments or tanks or wells, and the wear and tear of the water-lifting apparatus, have been excluded, as it is next to impossible to distribute these over area and time.

The cost of the actual process of irrigation by simple gravitation is almost *nil*, as nothing is required beyond guiding the water over the fields. The cost of irrigating with the lever is as follows:—

	Rs.	A.	P.
One man to lift for four days at 1 anna 9 pies per diem ...	0	7	0
One boy to guide water into the plots for four days at 1 anna ...	0	4	0
Total ...	0	11	0

With the basket the cost is as follows:—

	Rs.	A.	P.
Two men for one day	0	3	6
One boy to guide	0	1	0
Total ...	0	4	6

The cost is, however, increased by 3 annas 6 pies for every additional stage. Thus if the water has to be lifted in three stages, six men will be required, and the cost of irrigation will rise to 11 annas 6 pies.

The above figures represent the cost of irrigating one acre of land only once. To get the total cost of irrigating one acre of any particular crop, the above should be multiplied as many times as the crop is watered during its existence. Thus a potatoe field usually requires to be irrigated 15 times, *i.e.*, for three months at intervals of six days on the average. The total cost of irrigating one acre of potatoes by help of the lever will thus be 15×11 annas, or Rs. 10·5 annas.

Improvements in irrigation.—The climate of the subdivision being naturally dry from October till June, irrigation cannot but be very useful to such crops as ripen in winter and the early summer months. The cultivation of these crops is extremely limited on account of the general absence of provisions for irrigation. Winter vegetables, tobacco and sugarcane are invariably irrigated wherever they are grown. With regard to these, comparison is inadmissible between the produce of fields which are irrigated and of those which are not. The difference is, however, enormous in respect of the paddy crop, which, although in the earlier months of its growth, does not much depend on artificial irrigation, is yet highly benefited by it during the latter months (Áswin and Kártic). The benefits of irrigation are however highly conspicuous in a year of deficient rainfall like the last. I need only reproduce here what I have said in paragraph 9 in respect of the Bundu embankment. The low rice lands which were irrigated with its water gave an outturn estimated at the lowest at 12 annas, while the average outturn in the neighbourhood scarcely reached 6 annas. There can be no doubt that if the country was provided with adequate means of irrigation the produce of paddy would be considerably enhanced in ordinary years, while in years of drought they would save the standing crops from destruction through want of moisture. They would prove a further source of wealth to the country, inasmuch as they would enable the cultivation of various winter and spring crops, which are at present either unknown in the country or cultivated in too small quantities, to be a material spring of wealth to the people.

The extension of irrigation is, in my opinion, the foremost agricultural problem in this subdivision. An exceptional facility for this extension lies in the undulating nature of the country, which makes it possible to construct an unlimited number of enbankments across the face of sloping depressions between contiguous ridges of uplands, and of the numerous streams and rivers which ramify in the country. I believe it is quite possible to bring irrigation water within easy reach of every village in the country. By a system of easily constructed embankments a part of the surplus water of the rains can be kept back for use during the months in which there is little or no rain. Thus in place of the extremes of abundance and scarcity of water which the country annually presents, we shall secure a continuous supply of water all over the year.

The conditions necessary for the construction of large irrigation canals do not exist in the subdivision. Only a few rivers like the Subarnarekhá, the Káro, the Koel and the Sunkh on the plateau, and the Kánchi, the Kokro and the Karkari in the Five Parganás flow more or less all round the year, but their supply in the dry months is too scanty to feed a large canal. An irrigation reservoir must be naturally larger in size than an ordinary tank. The smallest will cost at least a thousand rupees, while many may exceed 10,000 rupees. There is little probability that the natives of the country will before long be so far advanced in enterprize and wealth as to be able to afford such sums for the construction of new embankments. The landed proprietors are as a class in a perennial state of bankruptcy; and

even when they have capital, they are too ignorant and improvident to think of enlarging their incomes by providing their estates with the means of irrigation. Under these circumstances, I am of opinion that no improvement of irrigation can be expected unless and until the State undertakes the construction of irrigation works, in the same way as it has done in Behar and the North-Western Provinces and elsewhere, or gives liberal encouragements to those who will undertake such works. No more appropriate and useful employment can be found for relief-labourers than earthwork in an embankment. For this purpose the executive officers of the district should keep ready a list of eligible sites for irrigation embankments in the subdivision. The policy of Government in respect of irrigation works, whether undertaken by themselves or by individuals or companies, is well defined. I need only point out that none of the works need involve large outlays, and as the works are naturally independent of each other, they can be taken up one after another and be made to suit the exigencies of finance.

SECTION 5.—*Agricultural implements.*

The agricultural implements in common use in Chutiá Nágpur Proper are the following:—

(1.) The *hár* or plough. Figure 3 represents the country plough of Chutiá Nágpur Proper. The body (called *hár*) is a single piece of sâl-wood (A B) about 30 inches long, tapering towards the share-end. It is much thicker than the body of the Bengal country plough. Owing to the greater wear and tear it is liable to from the sandy and rocky nature of the soils of Chutiá Nágpur, it does not usually last for more than a year. The *phár* or ploughshare (C D) is a straight piece of iron about an inch broad and 8 to 12 inches long. It is located in a groove on the upper side of the body and secured in its position by an iron hoop (E) through which it passes. The share protrudes, as shown in the figure, about four inches from the lower end of the body of the plough. It is the most valueable part of the plough, and when not at work is taken out and kept in the house. It requires very frequent repairs, and every two or three weeks, when at work, new iron has to be added on to it to keep it at its proper length and thickness. The rate of wear depends on whether the soil is hard and rocky or soft and clayey. In rocky soils the ráyat has to take his *phár* every two or three days to the *lohár* or village blacksmith to get it repaired. A *phár* weighs about a *pukka* seer. The remaining parts of the plough are the *harish* or beam (F G), the *phariád* or handle (K), the *joát* or yoke (not shown in the figure). The *harish* or beam is a long piece of wood driven at one end through the upper part of the body and resting on it at an angle of nearly 40°. The *joát* or yoke is attached to the beam by means of leather straps called *nádhás*. These latter are made by *Chámárs*, and sell for about one anna apiece. Strictly speaking, the *joát* is no portion of the plough; it is a common appliance for yoking oxen to all kinds of draught implements.

FIG. 3.

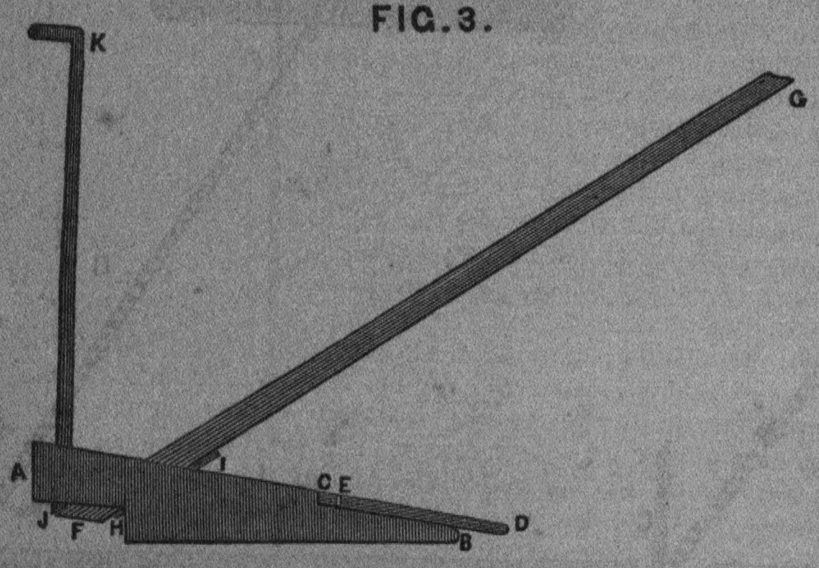

The ploughs used in Chutiá Nágpur Proper are of two sizes: the smaller ones are drawn by bullocks, and the larger ones, which are much broader and heavier, by buffaloes. The latter give about 50 per cent. more work than the former.

The different parts of the plough cost as below—

Body, 2 annas; share, 5 annas; beam and handle, 1 anna; total 8 annas. Besides, the fastenings cost: yoke, 2 annas; leather strap, 1 anna; ropes, 1 anna; total 4 annas.

(2.) The *korí* or spade. It is used for all manner of earth-work, such as constructing *árs* or low embankments at the edges of rice-fields, digging fields where the plough cannot be used. It consists of a flat shovel-shaped iron-share with a hoop at one end, into which fits a handle about 30 inches long. This instrument is too familiar to need any further description. The iron-share sells for 12 annas to Re. 1 according to size.

(3.) The *khurpá* or hand-hoe, used for weeding. It is the same as is used for *chailling* grass. As a weeding instrument it is, however, little used, the weeding of rice-fields, &c., being mostly done by the hand. The *khurpá* costs about 2 annas.

(4.) The *páttá* or harrow. It consists of a log of wood about five feet long, of a roughly round shape, attached to the yoke by means of a couple of bamboo sticks which form a triangle with the *páttá* as the base. It is of extremely simple design, and if bought costs about an anna. The man driving the pair of bullocks stands over the log of wood, and thus adds pressure and firmness to the implement. The *páttá* is used for the same purpose as the English harrow, viz., to pulverize the soil and to bury in seed. It also serves to press down the soil, and thus takes the place of the roller as well.

(5.) The *hengá*, *chowk* or leveller and clod-crusher. It consists of a plank of wood about 10 feet long and 4 inches broad, which is drawn by two pairs of oxen, one yoked to one end and the other to the other. It is fastened to the yokes by means of two iron chains.

FIG. 2.

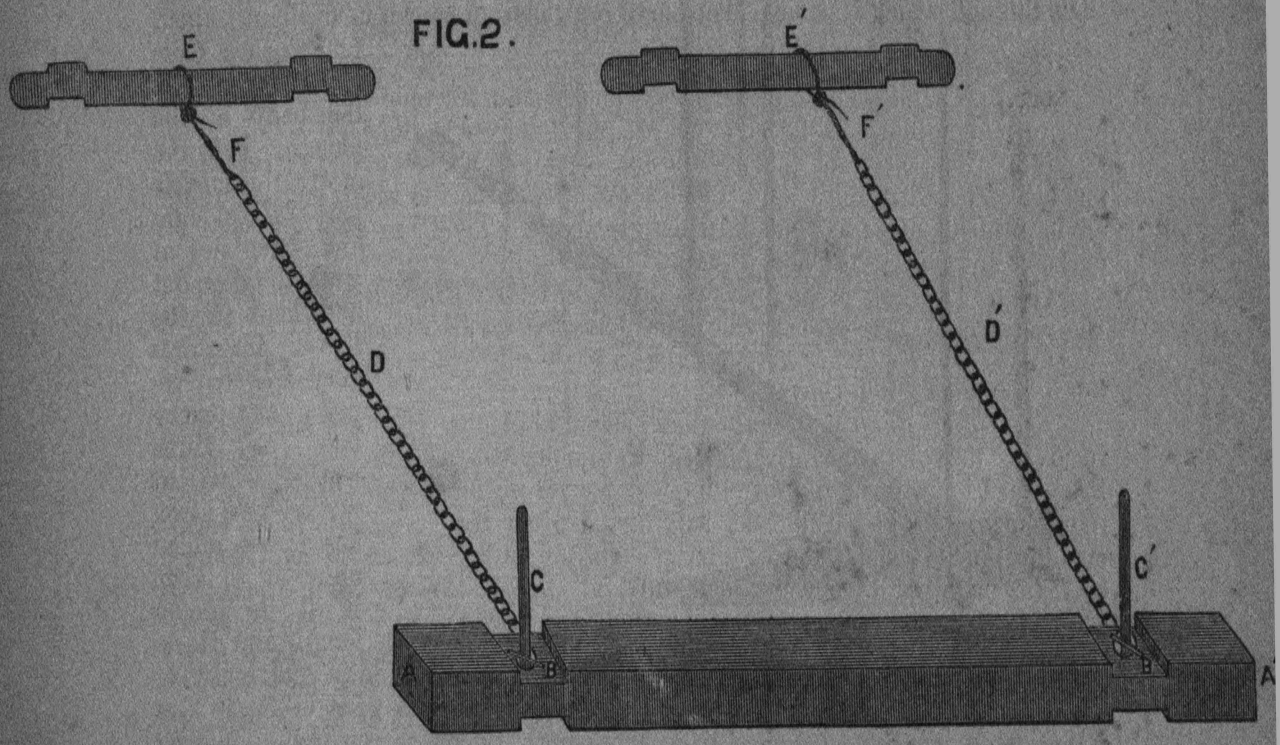

Figure 4, which represents the *hengá* of Palamow, and differs from that of Chutiá Nágpur Proper in having a square log of wood, will explain the mode of attachment. The iron chains are about five feet long, and fastened at the furthest ends to leather thongs leading to the yokes. Two pegs (C C′) are driven right across the plank. The *hengá* may be used for two different purposes. When wanted to crush clods and press the soil, it is used with the flat surface upside and the two pegs standing up, as shown in the figure. When, on the other hand, it is used as a leveller, the two pegs are made to rest on the ground on the outside, and the narrow surface comes to the top. Two men stand with their feet pressing on the pegs; and as the implement is drawn forward, it carries along with it a certain amount of earth which can be left at any low place, if so desired, by letting go the two pegs; these at once come up to the top, and the *hengá* naturally assumes the

position exhibited in the figure. The *hengá* is a most useful implement, and is in constant requisition for making puddle in rice-fields before transplanting, and for harrowing and levelling uplands for irrigation. It combines the functions of a harrow with those of a leveller and roller. The *hengá* costs about 8 annas, exclusive of the iron chains, which may cost about a rupee.

(6.) The *khárá* or earth-remover. It consists of a short plank about 18 inches broad and 4 feet long. It is drawn by a pair of oxen, in the same way as the *páttá*. The plank is held slightly inclined to the ground by means of a short handle at the middle of its upper edge. The *khárá* is used for levelling down the unevennesses of a newly-made rice-field. For this purpose the field is first ploughed, and the *khárá* is drawn over it to carry the soil from the higher parts of the field to the lower. It is held tightly at an angle to the ground and drawn forward, carrying with it a certain amount of loose soil. On reaching a depression which wants to be filled up, the handle is let go, and the soil which was being carried forward is left in the depression. The *khárá* costs about 8 annas.

(7.) The *dhelphurá* or mallet. It is a simple wooden mallet with a short handle. It is used for breaking the larger clods in fields, which could not be crushed by the *páttá* or the *hengá*. The mallet is in constant use by market-gardeners, who find the *páttá* not sufficient to pulverize the soil to the required degree of fineness. The *dhálphurá* costs two pice.

(8. The *hánsuá* or sickle. It is the same implement as is used for reaping crops and cutting grass in Bengal. It costs about one anna.

(9.) The *ákain* or pitchfork. It consists of a bamboo or other wooden rod about five feet long, with a semi-circular iron hook at the top. It is used for sifting paddy straw in the course of threshing. It costs one pice.

(10.) The *báselá* or axe, costing eight annas. It is used by *lohárs* and Kol ráyats for working wood.

(11.) The *rukná* or chisel, costing about two annas; used by *lohárs* and Kol ráyats for working wood.

(12.) The *sábar* or crowbar, occasionally used for removing large stones and for making holes in the earth ; costs from 12 annas to Re. 1.

(13.) The *gaitá* or pickaxe, costing from 12 annas to Re. 1; used for making trenches in stony land. The *báselá*, the *rukná*, the *sábar* and the *gaitá* are implements not in common use by the ráyats. They are used for special purposes and possessed by only a few.

(14.) The *sagár* or cart with solid wheels. It costs from Re. 1-8 to Rs. 3,—*vide* page 22, on conveyances, for description and use of this cart.

(15.) The *banghy* or carrying-rod is too well known to need any description—*vide* page 23 on conveyances.

Suggestions for improvement.—I am as yet unable to offer any suggestions regarding the improvement of agricultural implements used in Chutiá Nágpur Proper. I know of no improved implements yet invented which will meet the requirements of the people and suit their purse. Many attempts have been made to improve upon the country ploughs of India, but so far as I know of them, none of them have combined all the qualities of lightness, cheapness, efficacy and easiness of manipulation and repairs, to suit the peculiar circumstances of Indian agriculture. Cheapness is the first consideration with ráyats. A country plough costs them only 8 annas, whereas the cheapest improved plough out will cost them not less than Rs. 5 or Rs. 6. Of all improved ploughs intended for Indian ryots, I take the Seebpore plough to be the best all round ; yet it has so far failed to be popular.

SECTION 6.—*Crops grown.*

I.—Cereals.

1. Lowland paddy (*Oryza sativa*).
2. Upland paddy (*Oryza sativa*).
3. Gondli (*Panicum miliare*).
4. Máruá (*Eleusine corocana*).
5. Maize (*Zea mays*).
6. Jawár (*Sorghum vulgare*).
7. Sáwán* (*Panicum frumentaceum*).
8. Kodo* (*Paspalum scrobiculatum*).
9. Wheat* (*Triticum sativum*).
10. Barley* (*Hordeum vulgare*).

N.B.—The crops marked with asterisks are cultivated to a very small extent in Chutiá Nágpur, but largely in Palámau, under which they will be accordingly treated.

II.—Pulses.

1. Urid (*Phaseolus roxburghii*).
2. Kurthi (*Dolichos biflorus*).
3. Barai (*Phaseolus mungo*).
4. Rahar (*Cajanus indicus*).
5. But* (*Cicer arietinum*).
6. Khesari* (*Lathyrus sativa*).
7. Lentils* (*Ervum lens*).
8. Bodi (*Vigna catiang*).

III.—Oilseeds.

1. Sarguzá (*Guizotia abyssinica*).
2. Mustard (*Brassica campestris*)
3. Gingelly (*Sesamum indicum*).
4. Castor (*Jatropha curcas*).
5. Linseed* (*Linum usitatissimum*).

IV.—Fibre crops.

1. Cotton (*Gossypium herbaceum*).
2. Kudrum (*Hibiscus cannabinus*).
3. Sunn (*Crotolaria juncea*).

V.—Garden crops.

1. Potatoes (*Solanum tuberosum.*)
2. Brinjals (*S. melongena*).
3. Mirchai (*Capsicum*).
4. Onion } (*Allium*).
5. Garlic }
6. Radishes (*Raphanus sativa*).
7. Peas (*Pisum sativum*).
8. Beans (*Dolichos lablab*).
9. Jhingí (*Luffa acutangula*).
10. Kadu, kaunhrá (*Cucurbitaceæ*).
11. Melons (*Cucumis melo*).
12. Spinach (pálak ság, *Beta bengalensis*).
13. Dherass (*Hibiscus esculentus.*)
14. Lál kndrum (*H. sabdariffa.*)
15. Arums.
16. Sakarkánda (*Ipomœa batatus*).
17. Tomato (*Lycopersicum esculentum*).

VI.—Miscellaneous crops.

1. Sugarcane (*Saccharum officinarum.*)
2. Tobacco (*Solanum nicotiana.*)
3. Betel (*Piper betel.*)

SECTION 6A.—*Harvests.*

The crops grown in the subdivision may be classed into two main divisions, viz. (1) arable crops, and (2) garden crops. The latter are almost exclusively grown by the Koeri caste, and will be separately treated. The arable crops fall under three harvests—*bhadoi*, *kharif* and *rabi*. Their English, vernacular and botanical names are given below :—

Bhadoi.

1. Gorá dhan (upland rice, *Oryza sativa*).
2. Gondli (millet, *Panicum miliare*).
3. Máruá (millet, *Eleusine corocana*).
4. Makái (maize, *Zea mays*).
5. Sáwán (millet, *Panicum frumentaceum*).
6. Urid (pulse, *Phaseolus roxburghii*).
7. Barai (pulse, *Phaseolus mungo*).
8. Bodi (pulse, *Vigna catiang*).

Kharif.

1. Don dhan (autumn and winter rice, *Oryza sativa*).
2. Kápás (cotton, *Gossypium herbaceum*).
3. Til (gingelly, *Sesamum indicum*).
4. Kurthi (pulse, *Dolichos biflorus*).
5. Sargujá (niger oilseeds, *Guizotia abyssinica*).
6. Kudrum (fibre, *Hibiscus cannabinus*).
7. Kodo (millet, *Paspalum scrobiculatum*).
8. Urid (var. subhapankí, pulse, *Phaseolus roxburghii*).

N.B.—The crops marked with asterisks are cultivated to a very small extent in Chutiá Nágpur, but largely in Palámau, under which they will be accordingly treated.

Rabi.

1. Rahar (pulse, *Cajanus sativa*).
2. Sarsan and lotní (mustard, *Sinapis nigra et alba*).
3. Gohum (wheat, *Triticum sativum*).
4. Java (barley, *Hordeum vulgare*).
5. Masuri (lentils, *Ervumlens*).
6. But (gram, *Cicer arietinum*).
7. Tisi (linseed, *Linum usitatissimum*).
8. Támáku (tobacco, *Solanum nicotiana*).
9. Ketári (sugarcane, *Saccharum officinarum*).

The relative importance of the three harvests in respect of area will appear from the following statistical figures compiled from Mr. Slack's Settlement Report of the Chutiá Nágpur estate, to which frequent references have already been made:—

	Area in acres.	Percentage on total cultivated area.
I. Bhadoi crops—		
(1) Occupying each more than 1 per cent. of cultivated area:—		
Gorá dhán	47,084	27·1
Gondli	14,266	8·2
Máruá	8,460	4·9
Urid	7,713	4·4
(2) Aggregate of bhadoi crops occupying each less than 1 per cent. of cultivated area* ...	1,237	0·7
Total of bhadoi crops ...	78,760	45·3
II. Kharif crops—		
(1) Occupying each more than 1 per cent. of cultivated area:—		
Don dhán	57,306	33·0
Kápás	2,541	1·5
Sargujá	16,692	9·6
Kurthi	1,951	1·1
(2) Occupying each less than 1 per cent. of cultivated area, aggregate of crops	1,286	·7
Total of kharif crops† ...	79,776	45·9
III.—Rabi crops—		
(1) Occupying each more than 1 per cent. of cultivated area:—		
Rahar	3,514	2·0
Sarsan and lotni	4,510	2·6
(2) Aggregate of crops occupying each less than 1 per cent. of cultivated area‡	3,163	1·8
	11,187	6·4
IV.—Garden crops, grass, betel, &c.	4,881	2·4
Total of all crops ...	1,74,604	100·0

Thus more than $\frac{9}{10}$ths of the cultivated area are about equally divided between bhadoi and kharif crops, and the remaining $\frac{1}{10}$th is left for *rabi* and various garden crops. The relative importance of the harvests in respect of the total outturn does not, however, immediately follow from the above, considering that the outturn of the principal kharif crop (rice) is much more per acre than that of most other crops.

* These include in acres—makái (727), barai (223), bodí (159), sáwán (32), kándá, &c. (96).
† These include in acres—til (1,231), kudrum (42), kodo (13).
‡ These include in acres—bút (1,679), matar (72), masurí (256), gohum (717), java (418), tisí (23), ketárí (13), támáku (2).

SECTION 6B.—*Rotation.*

Properly speaking there is no rotátion on the *don* or low-lands, as rice is the only crop raised on them year after year. In order, however, to make an equal distribution of labour in Ásár and Srávan, and to economise the supply of manure, it is a common practice with the ráyats to sow rice broadcast in one year and to put in transplanted rice in the next. Manure is applied only in the year in which the rice is sown broadcast, and seldom or never in the year in which it is transplanted. The rice lands thus get manured once in two years. This system of alternating broadcasted rice with transplanted rice arises from want of time and deficient supply of manure, and is not in favour with well-to-do ráyats. I have found many of these growing transplanted rice year after year.

In parganá Tori, *khesári*, a coarse pulse, is sown among rice in September on lands which remain naturally moist for a sufficiently long time. Such lands thus produce two crops in the year, viz. (1) rice, a kharif crop, and (2) *khesari*, a rabi crop.

In some places, where water is at hand, the high lying or *chaunrá* low land are sown with barley, wheat or gram after the rice has been taken off in October. Such lands are plentifully found in the country to the south of the Karkarí in the Five Parganás and in Torí.

The staple upland crops of Chutiá Nágpur Proper are *gorá* or upland rice, *gondlí*, *máruá*, *urid*, *kurthí* and *sargujá*. A regular system of rotation is observed in the cultivation of these crops. It may be represented thus :—

1st year	...	...	Máruá (manured).
2nd „	...	...	Gorá (not manured).
3rd „	...	...	Urid (ditto).
4th „	...	...	Gondli followed by sargujá or kurthi (ditto).

The rotation begins with *máruá*, a bhadoi cereal, which requires invariably to be manured. It is off the ground by the middle of November at the latest, after which the land is repeatedly ploughed at intervals up till the time for sowing *gorá* rice in the next year. The object of the repeated ploughings is to thoroughly work up the soil by exposure to heat and cold, and to destroy the seeds and roots of grasses and other weeds which are very obnoxious to upland rice. It occupies the ground from June to September, and leaves it full of grass, which serves as a good manure for the succeeding pulse (urid).

The ploughings for this crop commence in Mágh (January-February); the sowing takes place in Ásár (June), and the crop is off the ground in Áswin (September). Urid is a leguminous crop, and as such is highly absorptive of manure, but I believe it leaves a great portion of the manure it appropriates in the soil for the use of the succeeding crop—gondlí. The latter is a millet which can grow on poor soil and with little labour. After the urid is off the ground, it is ploughed several times from Mágh till Jeyt (February to June), when the gondli is sown. It occupies the ground till Bhádra (August), when the land is ploughed two or three times, and is sown with sargujá (an oilseed) or kurthi (a pulse) in the following month.

The rotation thus occupies a period of four years, and yields five crops, three of which are cereals. The principles of rotation are very well understood by the people, as it is evident from the considerations which guide the above rotation. The great object of the ráyat is how to raise a good crop of upland rice, and to keep it clean of grasses, which are very injurious to it, and particularly troublesome and expensive to weed out. Gorá is a cereal which would be greatly benefited by cowdung, but this the ráyat is afraid of applying for fear that it naturally contains the seed of many weeds and grasses, which growing faster than rice will eventually choke up the latter. The object of supplying sufficient manure to the rice, and at the same time of keeping it as far as possible free from weeds, is indirectly attained by manuring the immediately preceding crop (máruá) and by repeatedly ploughing the land for several months before sowing. The above rotation is sometimes modified by introducing the urid in the second year between the máruá and the gorá rice, the whole rotation thus occupying the same period of four years as before. The introduction of a leguminous crop b[redacted]two cereals is calculated to leave the soil in a state of manurial equilibrium, and is consonant with the teachings of science.

The number of crops raised on the four years' rotation are five, viz. máruá, gorá, urid, gondli and sargujá or kurthi. The number is often increased by sowing rahar (*Cajanus indicus*) with gorá and gondli, and bodi (pulse) with máruá. The rahar stands on the ground after its associates have been reaped, and is itself harvested in Cheyt (March-April), while the bodi is handpicked some time before the máruá is harvested.

Besides the usual four years' rotation and its modification described above, the primitive practice of letting land fallow at frequent intervals with a view to renew its strength is still widely practised in every part of the subdivision. At one time I believe it used to be very common, but is getting more restricted with the increase of the pressure of population.

In the southern parganás, where the uplands are sandy and poor in quality, I met with a larger proportion of fallow land than in the country round about Ránchí, where land, being more valuable, is seldom suffered to lie fallow. According to the fallow system of rotation, a ráyat reserves a certain portion of his upland, preferably that which lies furthest from his homestead, or is naturally poor in quality, for the cultivation of gorá. Such land is accordingly spoken of as *gorá*, or merely as *tánr* or *dánr*. He divides it into two, three, or four blocks, according as gorá is grown once in two, three, or four years. The rotation may be expressed thus:—First year, *gorá*; the next one, two or three years fallow.

Section 6c.—Crop cultivation—I. Cereals.

1. Lowland Rice.—*Don dhán.*

Importance.—Lowland rice (*don dhán*) is by far the most important crop of the subdivision. Roughly speaking it occupies one-third of the total cultivated area, and supplies about two-thirds of the total cereal food-produce of the country (*vide* food-supply, page 12).

Varieties.—The varieties of low-land rice are extremely numerous, and need not be mentioned by name. But they all fall under one or other of the three following classes, viz.—

(1) *Guruhan, jorhan or barká* rice, *i.e.*, as its vernacular names mean, rice of heavy growth. *Jorhan* rice, as it is oftener called, is grown only in the *gárhá don* lands. It is reaped in Aughrán (November-December), and is known as *winter rice*. The *jorhan* group includes a very large number of varieties, and comprises all the finer kinds of rice.

(2) *Lahuhan* rice, or literally rice of lighter growth. In Bengal this class of rice is known as *chhotná*, *i.e.*, small. It is reaped in Kártic (October-November) and known as autumn rice. Like the *jorhan*, the *lahuhan* division includes a large number of varieties, all of which are of a coarse character. *Lahuhan* rice is grown on *chaunrá don*, *i.e.*, on the higher lying terraces, and from this cause is extremely liable to drought.

(3) *Tewán* rice, sown in Mágh (January-February), and reaped in Bysákh (April-May), and thus corresponds to the *boro* rice of Bengal. There are no distinctive *tewán* varieties The two varieties commonly grown as *tewán* are *kánáo* or *jenjné* and *álsangá gorá*, the first of which belongs to the *lahuhan* division, and the second is a variety of upland rice.

The *don* lands are about equally divided between *guruhan* and *lahuhan* rice, but the importance of the former is greater than that of the latter, inasmuch as *guruhan* rice, which is grown on *gárhá don*, is more productive and much less subject to drought than *lahuhan* rice, which is confined to the *chaunrá don*. *Guruhan* rice is the stand-by of the ráyats in a year of drought, like the last, and confers on the country a large measure of its immunity from famine.

Tewán rice is grown to a very limited extent in the country. It is grown on land which remains perpetually wet owing to the water of some rivulet or spring flowing over it. Such land is met with in many villages, but the cultivation of *tewán* is not in favour with the mass of the ráyats, as it requires to be

watched day and night against the village cattle, who roam about freely in those months during which the *tewán* occupies the field.

The majority of the varieties of paddy grown in the country are coarse, but there are several very fine ones grown by zemindars and well-to-do ráyats. These include the *kanakchur*, *lakshibhog*, *nakhchirní*, *kalamdání*, *&c.*

Methods of cultivation.—There are two methods of growing lowland rice, viz. (1) that in which the seed is sown broadcast in Jeyt-Ásár (June); and (2) that in which a nursery is made in Jeyt-Ásár, and the seedlings transplanted therefrom to the fields in Srávan (July-August). Both *guruhan* and *lahuhan* rice can be grown in either way, but *tewán* is invariably sown broadcast. The two methods are entirely different from each other, and will be separately treated. Rice which is grown by sowing the seed broadcast will be, for shortness' sake, spoken of as *broadcasted rice*, and rice which is transplanted as *transplanted rice.*

Every variety of lowland rice (excepting *tewán*) can be grown in either way, but the finer varieties of *jorhan* rice are usually transplanted for this reason, that if grown by sowing broadcast, the grains become larger and coarser.

Coarse paddy is always steeped once or twice in boiling water before being husked, but the finer varieties do not receive any such treatment, and are eaten *ároá* or unsteeped. Steeped rice is known as *ushná* and is easier of digestion.

Soils.—Rice does best on alluvial soil or *pánkuá* as it is called in the Five Parganás, where alone in the subdivision this class of soils is met with. Next to alluvial soil is black nágrá, a strong clay soil, and next to the latter is *khirsi* or clay loam.

Rotation.—I beg to refer to the section on rotation (page 53) for information regarding the rotation of lowland paddy.

A.—Broadcasted rice. (*Buná dhán*).

Cultivation.—If the soil remains naturally moist, the first ploughing is given directly after the winter-rice harvest is over; otherwise immediately after the first fall of rain in Mágh. During this month and Fálgun two or three ploughings are altogether given, and the soil left exposed to the action of heat and cold In Cheyt the field is manured with cowdung, as much being applied as the ráyat's stock of manure can afford. A good dressing will be 4 tons per acre but few ráyats can afford to make such liberal use of their manures. The usual time for applying manure is immediately after the *Sarhul* festival, which takes place at different periods during Fálgun, Cheyt and Bysákh, but in most places in Cheyt. The manure is first distributed over the field in small heaps, and then spread out by the *kodáli* or spade, or buried in by ploughing.

In Bysákh or Jeyt, as soon as rain has fallen, the field is ploughed once more; the larger clods, if any, are broken by the mallet (or the *dhelphunrá*); the harrow (*mehr* or *chowk*) is then passed over the land. The time for sowing extends from late Cheyt to early Ásár, according as rain begins early or late. Cheyt-sown rice comes up stronger and gives a better outturn than late-sown rice. After the land has been prepared, the seed is sown broadcast at the rate of about one pukka maund per acre, and buried in by a light ploughing. The harrow then passes once more over the field, which is thus left till Srávan.

There are two ways of sowing paddy, according as the soil is in the form of dust or is moist. In the first case the sowing is called *dhuri-buná* or dust-sowing; in the latter it is called *rash-buná* or moist sowing. The first method of sowing (*dhuri-buná*) has been described above; in the second case (*rash-buná*), the only difference is that the soil being moist, the clods have not to be broken, and the last ploughing after sowing is not necessary, the harrow only passing over the ground after the seed has been sown. The last ploughing is essential to *dhuri-buná* in order to bury the seed deep enough. In this case the seed will remain in the ground for a fortnight or even longer, *i.e.*, as long as rain has not fallen, and germinates directly after the soil has been moistened by the first shower of rain. Of the two ways of sowing, the *dhuri-buná* or dust sowing is preferred, as it gives a better outturn than the other.

Rice fields, whether sown or transplanted, are ploughed three or four times. The first ploughing is known as *chirní* (*lit.* cutting open), the second as *dobar*, the third as *uthão;* and the fourth as *puráo* or finish.

Repairing árs.—The *árs* or embankments enclosing the rice-terraces have to be repaired every year with a view to make them as far as possible watertight. The *árs* of fields intended for broad casted rice are repaired usually in Mágh, that is, at the time they are ploughed for the first time. There is, however, no fixed time, excepting that the repairs must be done before the sowing time, and as the soil gets very hard in Cheyt and Bysákh, the most convenient period for doing the repairs is after the soil has been moistened by the winter showers. The repairs consist in earthing up any gaps that may have been made during the previous rains, and in adding earth to the top and sides of *árs*, and then making them strong enough to resist a sudden rush of water into the terrace. The repairing of *árs* is an item of heavy labour, and requires at least about 12 men for one day per acre.

Regulating water.—From the time the paddy is sown till the end of the rainy season, the amount of water in the terrace has to be constantly regulated. When too much rain has fallen, the ráyat makes a narrow opening on the lower side of the terrace, and allows the surplus water to flow off. But in case there has been not rain for a day or two, the opening is earthed up, and sufficient water is kept in the terrace. When the rainy season is about to close, that is, about the end of Bhádra (middle of September), the *árs* are made as watertight as possible, the ráyat's endeavour being to keep in as much water in the terrace as he possibly can.

Weeding.—After the paddy has been sown broadcast, nothing is done till Srávan, beyond regulating water in the terrace in the manner described above. In Srávan the plants have become 8 to 10 inches high, and are found more or less infested with grasses. In order to destroy the latter, the field is once ploughed and harrowed; this operation is known as *bidháli* or *bidhána.* The rice plants, together with the grasses, get partly buried in the mud; the latter are largely destroyed, but the former come up again in about a fortnight. About a month later on, that is in Bhádra, those grasses which have escaped being destroyed are carefully handpicked and serve as excellent fodder for cattle: sometimes two weedings are given. After weeding nothing is done till harvest time. The method of harvesting rice will be described later on after all the different ways of growing it have been described. In the western pargánas rice is weeded only by well-to-do and intelligent ráyats, as the operation is equally troublesome and expensive. In the police circle of Silí, adjoining the district of Mánbhum, the weeding is followed by an operation called *gáchi-kátá.* It consists in filling up gaps with the plants removed from thickly grown spots. This insures an equal distribution of the plants over the field, and thus encourages them to tiller, that is, to throw up fresh shoots. The *gáchi-kátá* operation is common in Bengal, but is not so much essential in Chutiá Nágpur, where the soil being much poorer, the rice plants do not tiller so freely as they do in the fertile soils of Bengal; and consequently they do not suffer so much from being close to one another.

Lewá-buná.—This is a method of growing sown rice adopted in various emergencies. It is followed only to a limited extent, and being cheaper and less troublesome is practised largely by the poorer ráyats. It is followed under the following circumstances:—(1) when the ráyat wants to save labour; (2) when there has been a heavy shower of rain, and land rendered thus unfit for sowing in the ordinary way; (3) in case there are not sufficient seedlings to plant the fields intended for transplanted rice; and (4) if through drought in the early part of the season, broadcasted rice fails. As a rule, *lewá-buná* is resorted to only in the last instance. The yield is much inferior in ordinary years, and as the roots of the plants do not go deep enough, *lewá-buná* rice is very precarious in years of deficient rainfall.

On *gárhá* or lowlying terraces almost any variety of *guruhan* or winter rice can be grown in the *lewá-buná* way. On *chaunrá* or high-lying *don*, two varieties are generally grown, viz. *karhání* and *kánáo* or *jenjne.* Both of these are of very light growth, mature quickly, and require considerable amount of rain for their growth. *Karhání* rice is highly prized by the aboriginal tribes, as it gives a rice-beer much stronger in quality than any other variety of rice.

If the field is intended for *lewá*, it is ploughed twice in Mágh and left as such. In Ásár, after a heavy shower of rain, the land is worked up into mud by the plough and the harrow, which go over it three or four times. The mud is

then allowed to settle down for a day or two; the supernatant water which comes above the mud is then drawn away, and the seed which has been previously made to germinate is sown broadcast. The germination is effected by soaking the cleaned seed in water for 24 hours, and then putting it in baskets, which are placed one over another with a view to cause partial fermentation; the top-most basket is covered over with a stone slab. The seed is kept in the baskets for another 24 hours. The sowing takes place on the third day, when the sprouts have just appeared: the germinated seed is known as *ánkowá*. When the plants have struck root, the field is treated in the same way as for broadcasted rice. Weeding is, however, seldom given, the yield of *lewá-buná* rice being too small to meet the expense of the operation. *Lewá-buná* rice is seldom manured for the same reason.

If *lewá buná* is resorted to in any other circumstances, the land is ploughed, harrowed and worked up into puddle in the same way as for transplanted rice. The seed is made to germinate and sown in the way described above.

B.—Transplanted rice (ropá dhán).

Seedbeds.—The seedlings are grown on carefully prepared nurseries, and then transplanted in the rice fields. There are two kinds of nurseries or *birás*—*matiháni birá* or upland nursery and *lehbirá* or lowland nursery. The *matiháni birá* gives stronger plants than the *lehbirá*, which, like *lewá-buná* rice, is more precarious. The latter, however, requires less seed, and comes up quicker than *matiháni*. The seedlings of all the finer varieties of rice are grown in *lehbirá*. Each of the two kinds of nurseries is described below.

The cultivation of land intended for upland rice nurseries and the method of sowing the paddy seed are the same as for broadcasted rice. The only differences are that the number of ploughings in the case of the nursery is larger, being six or seven and often more; the application of manure more liberal, and the seed sown very much thicker. *Matiháni birá* is manured with ashes and cowdung, which has been previously burnt with a view to destroy the seeds of grasses and other weeds. The quantity applied is usually about double that given to fields to be sown with rice. The quantity of seed sown in *matiháni birá* per acre is seven to eight pukka maunds.

Matiháni birá is made in *bári* land or in portions of the *dihári* lands, *i.e.*, those adjoining the homesteads. Upland nursery lands are known as *cheerá*, and besides yielding the seedlings are annually cropped with various *rabi* crops, such as mustard, brinjals, wheat and barley.

The time for sowing the paddy seed in upland nurseries is from late Joyt to end of Ásár.

The cultivation of *lehbirá* is similar to that of *lewá-buná*, or mud-sown rice. The land is occasionally broken open by one or two ploughings in Mágh. *Lehbirá* is manured with raw cowdung a few days before the seed is sown. The germinated seed is sown on the puddle made by repeated ploughings and harrowings. The rate per acre is considerably less than that for *matiháni*, and is about 6 maunds per acre of nursery. No weeding is given to *lehbirá*. The seed is sown in Ásár and early Srávan, and the seedlings get ready for planting out in from 20 to 30 days.

One acre of rice nursery will afford sufficient seedlings for planting about 6 to 8 acres of paddy lands. It is calculated that one *kát* of land requires 40 *pailás* (= one *kát*) of seed if sown broadcast, 45 *pailás* of seed if the seedlings are grown in upland nursery, and 35 *poilás* if they are grown in lowland nursery.

Cultivation.—In Ásár, when the soil has been softened down by the rain, the land is broken by the plough, the embankments or *árs* are repaired, and water kept in the terrace for a few days with a view to cause grasses to rot. The water is then let off, a second ploughing is given, and water again shut in for a few days. The third ploughing (which is the last but one) is followed by a harrowing with the *chowk*, and a day or two after, the land, if uneven, is levelled by the *kárhá* or the *mher* (harrow). On the day of the planting, the land is once more ploughed, and the *chowk* goes over it round and round, so that the soil and water get mixed up into a uniform puddle, on which the seedlings

are planted in the manner described below. The number of ploughings is usually four, the names being the same as given under broadcasted rice.

Manure.—Transplanted rice-fields seldom or never receive any manure, but the nurseries have to be plentifully manured. The ráyats' stock is too limited to spare manure for transplanted rice, although it is admitted that the application of cowdung will be of considerable benefit to it. I have found a ráyat here and there who, being well off, will only grow transplanted rice; this he manures liberally and gets in return better crops than his neighbours. The reasons why transplanted rice is not extensively grown, and why most ráyats prefer to divide their rice-fields between broadcasted and transplanted rice, have been detailed in a preceding paragraph.

Transplanting.—The seedlings are first uprooted from the nursery and made into bundles, which are then carried to the field. Twelve women (the lighter field work being usually done by Kols and low Hindu caste women) are calculated to uproot seedlings enough in one day for one acre of land, and 24 women to transplant the same. The bundles of seedlings are thrown into the fields at adequate intervals; each woman takes a bundle, and with her thumb and forefinger makes a hole into the mud into which she thrusts a few plants. The seedlings are planted at intervals of 6 to 8 inches. The reason for close planting is that rice does not tiller so well in the poor soils of Chutiá Nágpur as they do in Bengal. The *gáchís* or clusters of rice plants do not become half so thick, I believe, as they do in Bengal, showing how poor the soil of the country must be in comparison with that of the Bengal plains. The time for transplanting the seedlings extends over Srávan and the first week of Bhádra. Late transplanted rice is extremely liable to various insect pests.

Regulating water.—After the seedlings have been transplanted, and as long as they have not struck root in the ground, the ráyat takes care that the terrace is not overflooded with water. After the plants have come up and appear to be growing, the quantity of water in the terrace has to be regulated in the same way as for broadcasted rice. No further treatment is necessary till the harvest time.

As a rule rice-fields are not irrigated. During the rainy months the rice-terraces remain more or less flooded, and the cultivator has only to regulate the quantity of water by alternately opening up and closing some part of the embankments. At the disappearance of the rain he tries to make *árs* as water-tight as he can, and in this way water can be left in the terrace for periods varying with the position and character of the soils. In ordinary years there are always a few showers in *Hastá* or *Háttiá* (first fortnight of Áswin) and in *Chitrá* (last fortnight of the same month), so that *lahuhan* or autumn rice, which is grown on *chaunrá don* and more liable to drought, does not suffer from want of moisture in the soil. The *gárhá* low lands, from their low position and the clayey character of their soils, are more or less retentive of moisture, and although they considerably suffer from drought never turn out a total failure. In the event of a drought intervening in Áswin and Kártic, as was the case last year, the loss falls very heavily on *lahuhan* rice. In many villages I found last year that the ráyats did not take the rouble of reaping their autumn rice, which was merely straw and husks, and was eaten down by their cattle. In the majority of villages the outturn of autumn rice barely reached 4 annas.

Autumn rice flowers in late Bhádra and the grains fill up in Áswin. Water is essentially necessary during this period, or otherwise the ears do not push up from inside the blades, and the grains remain empty, and become what the people call *pilái*. For the same reasons a few showers in Áswin and Kártic would considreably benefit winter or *guruhan rice*.

In years of normal rainfall the necessity for irrigating paddy is not much felt by the ryots. This partly counts for the almost utter absence of provisions for irrigation in the country. It is, however, freely admitted by the people that the yield of rice can be largely increased by irrigation even in a year of normal rainfall. The subject of rice irrigation has been treated in detail in the section on irrigation, to which I beg accordingly to refer.

Rice harvest.

Period.—The rice harvest extends over the two months of Kártic and Ághrán, that is, from the middle of October to the middle of December.

Lahuhan or autumn rice is harvested in Kártic, and *guruhan* or winter rice in Ághrán.

Threshing yard.—Before the harvest begins every ráyat prepares his *kharyán* or threshing yard by scraping grasses off a convenient plot of ground, and then cleaning and making it even with a plastering of cowdung. If the rice fields are near at hand, the *kharyán* is made in *bári* land, or if they lie at a distance, on an adjoining plot of fallow *tánr*. In the latter case he builds a temporary straw hut, from which he can watch his rice heaps. Rocky places, when they are found in any village, are invariably turned into *kharyán*, as these are very easily kept clean, and do not require to be changed every year.

Harvesting.—The work of harvesting is done both by men and women in Chutiá Nágpur, but in the Five Parganás women are seldom employed for this purpose. Sixteen men and 20 women will harvest one acre of rice in one day, the actual number depending on the growth of rice. On the plateau of Chutiá Nágpur the rice plant never attains a height of more than 3 feet, and the straw is not long enough to be made into *bicháli* or bundles, as is usually done with the heavier varieties of rice in Bengal. The stalks are accordingly cut at some distance (6 to 8 inches) from the ground, the stubble being subsequently fed down by cattle. In the Five Parganás lying below the Chutiá Nágpur plateau the soil is more fertile, the rice plants become of longer and heavier growth, and the straw long enough to be made into bundles. The heavier varieties of rice (*guruhan*) are, when the ráyat so wishes it, cut at the base with a view to keep the straw intact and convert it into *bicháli*. Most portion of the *guruhan* and the whole of *lahuhan* rice is, however, cut some way up the stalk, as in Chutiá Nágpur. The rice plants, as they are reaped by the sickle, are left on the ground in small bundles, which are subsequently collected into larger bundles, and these latter into loads, which are then carried to the *kharyán* and arranged into hollow circular heaps called *chakras* with the ears on the inside. There they remain until the time for threshing comes.

Threshing.—The method of threshing rice is the same as in Bengal. From five to seven bullocks are tied in a line, and are driven round and round over the rice stalks which have been spread out in a circle. The bullock at the centre is not tied to any post as is done in Bengal and Behar. Occasionally two or three lines of bullocks are employed in order to expedite the work. Four men and ten bullocks (five in a line) may thresh one acre of rice in six hours from morning till mid-day. Two men drive the two lines of bullocks, and the other two sift the straw with a pitchfork, or *ákáin* as it is called. Towards the end, the straw is well sifted by the hand, and the grains allowed to drop below on the ground; the straw is then gradually removed, layer after layer, and the paddy, together with small broken bits of straw, left on the ground of the *kharyán*. The uncleaned paddy is then taken in a *sup* or winnowing basket, which the ráyat holds as high as his head, and shakes it to and fro to let down the mixed grain and chaff. The paddy grains, being heavy, fall at his feet, while the lighter chaff and dust are blown away to a distance by the breeze, caused by the shaking. The cleaned paddy is then measured out and either stored or disposed of in various ways. *Gorá-cátá* rice—rice reaped at the base of the stalks in order to convert the latter into *bicháli*—is threshed in the Five Parganás by beating the bundles over a flat wooden plank, usually the flat surface of a *sagar* wheel. This process takes more time, but the straw is much more valuable.

Watching.—During the harvest and threshing time the cultivator has to be perpetually on the watch to see that the paddy is not stolen away by dishonest labourers. In the *khariyán* he builds himself a rude triangular straw hut in which he would sit up and sleep at night so long as the threshing is not finished. As a further precautionary measure, it is a regular custom with the ráyat to strew ashes in several lines over the surface of the conical heaps of paddy, and place a dungball at the top so that the least tampering with them will bring down the ball and upset the ash lines. This is especially done to prevent frauds on the part of servants in charge of the *kharyán*.

Harvest wages.—Harvest wages are paid in various shapes, and are considerably greater than ordinary day wages. Money wages are not usually paid. In some places the reaper gets one load out of every 21 loads of paddy he reaps. In this way he can earn from five to ten seers of paddy in a day. In other places he gets a bundle of paddy stalks every day he reaps. This may contain

five or six seers of paddy. The usual daily wages is three seers of paddy and one poá of cleaned rice.

Yield.—The yield of paddy ranges from 20 maunds at the best to 8 maunds per acre. Ten maunds by weight will, I believe, represent the average yield per acre. In the Five Parganás, the rice lands are more productive, and the average there is greater by a couple of maunds or so.

The yield of straw is on the average about two maunds and a half. It should be remembered that the paddy grown in the district is of very light growth, and the bulk of straw is left in the field as stubble.

Storing.—When the paddy has been threshed and cleaned, the first thing the ráyat does is to satisfy the *sáhu* or grain-lender from whom he may have borrowed in the previous months; he then delivers over the customary quantities to the *lohár* or ironsmith and to various other village functionaries. Out of the remainder he keeps apart a certain portion for family consumption for one or two months, and the surplus is then stored for future use. There are two ways of storing paddy and rice in vogue, namely, in *morás* and in *delis* or large bamboo baskets. The *morá* is made of loose straw, and is of spherical shape. The paddy is placed inside the straw, which is bound round and round with straw and *chop* or bark ropes. The straw remains about a couple of inches thick over the grain, and is made tight and hard by being bound up with ropes. A morá may contain 20 maunds of paddy; often much less. Paddy kept in *morás* enjoys almost perfect immunity from weevils, and keeps on the whole better than when it is stored in bamboo baskets. These latter are of a roughly cylindrical shape with a concave bottom. They are first plastered on the inside with mixed earth and cowdung in order to make them air and water-tight. After being filled up with paddy, the tops are covered up with straw, which is subsequently plastered over with the dung mixture. *Delis* are not in common use by the ráyats for storing grain, and are not so safe against weevils as *morás*.

Cost of cultivation.—It is rather difficult to estimate the cost of cultivation with accuracy. Agriculture is not carried on in India on the same business principles as in England; the ráyat never keeps account of his income and outlay. In the estimates of cost of cultivation given in this chapter, the wages of a man have been taken at 4 pice per diem; the daily wages of a temporary field servants vary from 5 to 9 pice, but as they are generally engaged for the year, their rate of wages does not exceed 4 pice per diem. The hire of a plough has been taken at 6 pice per diem, the price at which it is actually let out in certain parts of the country. Neither manure nor straw have been valued, as they are seldom bought and sold, excepting in the immediate neighbourhood of Ránchí, Lohárdagá and such important places.

Cost of cultivation of paddy sown broadcast.

	Rs.	A.	P.
4 ploughings with harrowings (3 ploughs will plough one acre in one day 3 × 4 = 12 ploughs, at 1 anna 6 pies) ...	1	2	0
Carrying and spreading manure (4 men for one day) ...	0	4	0
One maund of seed paddy	1	0	0
One ploughing and harrowing at *budhána* (3 ploughs at 1 anna 6 pies)	0	4	6
One weeding (20 women at 1 anna per diem)	1	4	0
Repairing embankments in Mágh (16 men at one anna per diem)	1	0	0
Reaping (16 women at 1 anna per diem)	1	0	0
Carrying the paddy loads to the threshing yard ...	0	2	0
Threshing (4 men and 10 bullocks will thresh produce of one acre in one day at 1 anna for man, 6 pies for bullocks)	0	9	0
Cleaning and winnowing (3 men for one day)	0	3	0
Rent of first class *don*	3	0	0
Abwábs (at 2 annas per rupee not unusual)	0	6	0
Total ...	10	2	6
Yield per acre of first class don, 12 maunds of paddy at 1 rupee per maund	12	0	0

Cost of cultivation per acre of transplanted paddy.

	Rs.	A.	P.
Ploughing $\frac{1}{8}$th of an acre for upland nursery 5 times with harrowing = $\frac{5}{8}$ths of an acre once, will take 2½ ploughs one day at 1 anna 6 pies	0	3	3
Spreading manure (2 men for one day)	0	2	0
Seed paddy, 45 seers, at Re. 1 per maund	1	2	0
Pulling out seedlings (8 women for one day)	0	8	0
Carrying the bundles of seedlings to the field (4 men for one day)	0	4	0
Ploughing one acre of field 4 times = 12 ploughs at 1 anna 6 pies	1	2	0
Harrowing (2 men and 4 bullocks)	0	3	0
Repairing embankments	1	0	0
Planting (one man to distribute the bundle and 20 women to plant)	1	5	0
Reaping and threshing yard	1	2	0
Threshing and winnowing	0	12	0
Rent and ábwábs of one acre of first class *don*... ...	3	6	0
Total ...	11	1	3
Yield of one acre of first class *don* = 12 maunds at one maund for the rupee	12	0	0

Pests.—Lowland paddy is subject to various insect and fungoid pests. The chief among the mare—

(1) *Bhenku* is a fungoid disease appearing in particular years, causing the blade to whiten and dry up. The people are ignorant of its cause and remedy. The amount of loss caused by *bhenku* is never great in Chutiá Nágpur Proper. At Jheria in Manbhum, I was told by many people that *bhenku* causes great damage to the paddy crop in some years, reducing its yield by as much as 50 per cent. There is a belief current among the people that if too much rain falls in Ádrá (last half of May) and cools down the soil, *bhenku* is likely to be more abundant and injurious. This belief may be well-founded. The study of the insect and fungoid pests of farm crops, and above all, of paddy is very important.

(2) *Bonki*, an insect pest which causes considerable damage to rice that has been transplanted late. The insects are minute, thin, wormlike caterpillars, which eat into the blades and ear-stalks. The affected plants become white in colour. The ráyat's remedy consists in spells and charms, one of them being to scatter bamboo shoots cut into small bits, accompanied by certain spells or *mantras*. The time when the young caterpillars appear is the latter part of Bhádro and the early part of Áswin. About this time the leaves of paddy which has been sown or transplanted early in the season have become too stiff to be eaten by the young worms, but late transplanted paddy affords young and delicate leaves on which they greedily feed themselves. This explains why paddy is infested with *bonki* only when it has been planted late.

(3) *Chátrá* or *rátá* is, I believe, a fungoid disease characterized by the plants dying away in patches.

(4) *Gándhá* or *makhi*.—This is a small winged insect appearing in swarms at blossoming-time. The fly emits a most offensive odour, which is said to dry up the milky juice inside the young paddy grains. It cuts into the ear, which falls down and dies. The pest is prevalent in a year of excessive rain.

Besides the above, paddy is infested with numerous, insects, which on the aggregate must cause a deal of injury to it. Mr. Sen has pointed out in his report on Burdwan that the main cause of the appearance of insect pests is that the ráyats close up their rice fields and allow the water to become stagnant. This he considers to be a serious mistake. Whatever this may be in Burdwan, it is not so in Chutiá Nágpur. Here the ráyat, by shutting up water at the end of the rainy season, tries to save the paddy from drought, and although it runs the risk of being infested with insects, the ráyat accepts this veil as the lesser of the two.

C.—Tewán or summer paddy.

Tewán paddy, as I have said before, is grown on land which remains moist during the summer months. Its cultivation resembles in every respect that of *lewábuná* or mudsown rice. The usual time for sowing *tewán* is the month of Mágh. It is reaped in Bysák and Jeyt, and occupies the field for about three months. The field should be constantly watched against cattle, which at the time are freely pastured all over the village lands. From this cause the cultivation of *tewán* paddy is not in general favour, and many fields, which are naturally suited to it, are left follow in the summer months. *Tewán* land fetches much higher rents, as they afford two crops of paddy in the year.

2. Upland Paddy (*Gorá dhán.*)

Extent of cultivation.—In Chutiá Nágpur upland paddy ranks next to lowland paddy in order of importance. It occupies, I believe, about one-third of the total cultivated area of the uplands. *Gorá*, the two millets—*gondli* and *máruá*, and maize—are the stand-by of the ráyats during the three months (Bhádra, Áswin and Kártic) previous to the great winter paddy harvest.

Rotation.—*Gorá* takes part in two distinct rotations, both of which have been treated in detail in the section on Rotation of Crops (page 53). Briefly speaking, it follows either *máruá*, or *urid*, according to one rotation, and is grown on fallow land according to the other. On good fertile land it may be taken also after *gondli*.

Varieties.—There are several varieties of *gorá* paddy, distinguished mainly by colour of the grains. All the varieties are, however, coarse in character. It need hardly be said that *gorá* is only another name for *áus* paddy.

Soil.—*Gorá* paddy does well on a light sandy loam; heavy clay soils are unsuited to its growth, as clay interferes with the proper diffusion of the roots.

Cultivation.—*Gorá* is always sown broadcast, and never transplanted as is frequently done in Bengal. In Chutiá Nágpur Proper it is never manured for fear of grasses which cowdung invariably gives rise to; in the Five Parganás, however, land intended for *gorá* is manured in the same way as *máruá*, which latter is very scantily grown in that part of the country.

Gorá land requires to be thoroughly worked up by repeated ploughings and exposure to heat and cold.

" Báro másh, tero chás "
" Tábe karo gorá ásh ; "

that is "plough 13 times in 12 months, then hope for gora paddy." The grasses must be thoroughly burnt up by heat by the time the land is fit for sowing in Jeyt or Ásár.

On land which has remained fallow for one or more years according to the fallow system of rotation, the first ploughing is given in the month of Bhádra. It is followed by one or two ploughings more in the same month, and the land is left as such till the month of Mágh. During the intervening months the ráyat is too busy with his harvest to be able to afford time for the ploughing of *gorá* land. On lands which have borne a crop of *máruá* or *urid*, the first ploughing is given in Mágh, after the soil has been softened down by a shower.

From Mágh till sowing time the land is ploughed and cross-ploughed at intervals of a fortnight or so. No other treatment is necessary before sowing, which takes place in late Jeyt and early Ásár The sowing is immediately preceded by a ploughing, and may be either *dhulibuná*, *i. e.*, in dry soil, or *rashbuná*, *i.e.*, in the moist soil according as the soil at the time of sowing is dry, or has been moistened by a shower. The seed is sown broadcast at the rate of about one maund per acre.

On the third day after sowing the land is ploughed once lightly and harrowed with the *chowk* with a view to bury the seed. I cannot account for the fact why the ploughing should be given on the third day, and not immediately after sowing, as is usually done with many other crops. Any grasses that may have sprung, up are carefully hand-picked, when the crop is about a foot high. Nothing else is done till harvest time.

Diseases.—There are two insect pests to which upland paddy is subject. These are—

(1) *Bhuská*—Is an ant-like insect which eats into the roots of *gorá* dhan, and thereby causes some amount of injury.

(2) *Nánuá.*—A spiny caterpillar, about an inch long, which causes considerable damage to *gorá* and to *máruá* in August and September by eating away the leaves. A few specimens of this caterpillar I sent to Mr. E. C. Cotes of the Asiatic Museum through the Agricultural Department for identification. *Nánuá* is said to be more abundant in the jungly villages; the jungles probably affording the proper habitat for the moths. It is said that the *nánuá* was unknown some 10 or 15 years ago. Its ravages are not limited to *gorá* and *máruá*; *kher* or thatching-grass has been largely destroyed by this insect in many parts of Chutiá Nágpur proper.

Harvest.—*Gorá* paddy is harvested in the last fortnight of Bhádro and the first fortnight of Áswin. It is reaped and threshed in the same manner as low land paddy. Any detailed description is therefore unnecessary.

Produce and cost of cultivation.—The produce of grain usually varies from 5 to 10 maunds by weight of unhusked paddy per acre: on the average 8 maunds valued at Rs. 8. The cost of cultivation per acre is as follows:—

	Rs.	A.	P.
Ten ploughings at 4 annas 6 pie per ploughing	2	13	0
One maund of seed	1	0	0
One weeding by 20 women at 1 anna	1	4	0
Harvesting, threshing, &c.	1	8	0
Rent of one acre for six months	0	6	0
Total ...	6	15	0
Yield of paddy 8 maunds valued at Re. 1 per maund ...	8	0	0

Gorá paddy is invariably steeped before husking in the same way as the varieties of low land paddy.

Suggestions for improvement.—It will be observed that although the ráyats are sensible enough to see that upland paddy will not grow well unless the soil has been well worked up and kept scrupulously clean, yet with the knowledge they at present possess they can do nothing more than plough up the land a certain number of times and clean the grasses and weeds which may be found infesting the young crop of paddy. The cultivation of upland paddy (as indeed of most other upland crops) can be improved by the use of more efficient implements in the first instance, and by the application of artificial manures. Deep ploughing with an inverted plough is likely to prove extremely beneficial, and will secure the very end which the ráyat has in view, viz, the thorough working up of the soil by repeated ploughings and exposure. A top dressing of a nitrogenous manure like saltpetre, or, in its absence, of ground oilcakes, may be tried with great advantage. This will avoid the only objection which the ráyat urges against the application of cowdung manure to his *gorá* land. The above suggestions, which apply equally to all the upland cereals (*máruá*, *gondlí*, maize) are independent of those made in various parts of this chapter as to the measures for the general improvement of the fertility of the soil.

3.—*Máruá* (*Eleusine corocana*).

Importance, &c.—*Máruá* is an upland cereal on which the ráyat bestows a great deal of labour and care. In point of the area of cultivation, it ranks next to *gondlí*, but it is a more prized crop than the latter. Regarding its place in the rotation, *vide* page 53.

Varieties.—There are two main varieties, viz.—(1) red or *lálká*, an early variety, ripening in late Bhádra and early Áswin according to the time of sowing. In the first case the crop is called *bhádoi*, in the latter *manjhelá*, *i.e.* intermediate between *bhádoi* and the second variety; and (2) white or *charká*, a late variety, ripening in late Áswin and in Kártic according to the time of sowing. The second variety can hardly be called a *bhádoi* crop.

Both varieties may be sown broadcast or transplanted.

A.—Broadcasted máruá. The land is worked up in the same way as for upland paddy. The ploughings commence occasionally as early as Bhádra directly after the previous crop is off the ground, but generally in Mágh after a shower of rain. Eight or nine ploughings in all are usually given, the more the better. The land is manured with ashes of cowdung, leaves, &c., in Cheyt and Bysákh after the Sarhul festival, as much being applied as the ráyat can afford. I have gone over many fields making rough estimates of the quantities of manure applied to them. It is usually set down in small heaps at intervals of about 10 feet, each heap containing about 10 seers of ashes at the outside. This gives a dressing of 108 maunds, or roughly 4 tons, of manure per acre.

In Jeyt the seed is sown broadcast at the rate of 10 seers per acre, and buried by a light ploughing followed by a harrowing. When the plants have become 6 inches high, the land is once more ploughed and harrowed in the same way and for the same purpose as for broadcasted low land-paddy. This operation is likewise know as *bidhána.* About a fortnight later on, when the plants have again come up, any grasses or other weeds that may have escaped destruction by the *bidhána* is weeded off by hand-picking. Nothing else is done till harvest time.

B.—Transplanted máruá.—Máruá is oftener grown as a transplanted crop, and as such succeeds better than when it is sown boardcast. Previous to transplanting the land is treated in the same way as for broadcasted *máruá.* The nursery or *birá* is made in a small plot of land in one corner of the field. A thick layer of dried cowdung cakes is spread over the selected plot and burnt down to ashes. The ashes are then mixed up with the soil by the spade or by the plough; the seed is sown broadcast and carefully covered over by the hand or by the *hengá.* The plants will come up directly after the first shower of rain in Jeyt. In case of transplanting, the amount of seed required per acre is somewhat less than when it is sown broadcast.

The seedlings are transplanted in the month of Ásár. The plough goes in front, and the seedlings are simply thrust into the loose moist soil of the ground at intervals of about four inches. They remain at first inclined to the ground, but soon resume their erect position. No weeding or any other operation is necessary before harvest time.

Harvesting.—Máruá harvest extends from the latter part of Bhádra to end of Kártic, according as the variety is early or late. Unlike other cereals, *máruá* can wait for a pretty long time to be reaped, as the grains adhere closely to the ear and do not fall off. The roundish ears are reaped by the sickle, leaving the long straw on the ground to be subsequently eaten off by the village cattle, or to be used as fuel. The ears are threshed either by beating with a stick or by a *samát* or pestle, in the same way as paddy is husked in Chutiá Nágpur. But when there is a large quantity to be threshed, it is threshed by cattle in the same way as paddy.

Diseases.—Máruá is subject to the attacks of the same caterpillar (*nánuá*) as upland paddy.

Outturn.—The outturn of *máruá* averages about five maunds per acre, valued at Rs. 7-8, and seldom exceeds 10 maunds.

Cost of cultivation.

(*Broadcasted máruá.*)

	Rs.	A.	P.
8 ploughings including harrowing at 4 annas 6 pies each ...	2	4	0
10 seers of seed	0	6	0
1 light ploughing at *bidhána*	0	2	0
1 weeding, 20 women at 1 anna	1	4	0
Harvesting, threshing, &c.	1	8	0
Rent of 1 acre for one year	0	12	0
Total ...	6	4	0

Yield ... ... 5 maunds (average
Value ... ... Rs. 7-8.

(*For transplanted máruá*).

	Rs.	A.	P.
8 ploughings, &c.	2	4	0
8 seers of seed in nursery	0	6	0
1 light ploughing at transplanting	0	2	0
20 women to plant, at 1 anna	1	4	0
Harvesting, threshing, &c.	1	8	0
Rent of one year	0	12	0
Total ...	6	3	0

Yield	5 maunds (average)
Value	Rs. 7-8.

4.—*Gondlí* (*Panicum miliare.*)

Varieties.—*Gondlí* usually follows *gorá* or *urid* in rotation. Its cultivation is very careless, and the outturn poor. There are several varieties, viz.—(1) the black or *káriyá*, most usually grown; (2) the white or *charká*; (3) ant-head or *diá-munri* of a motley colour, intermediate between the first and the second: (4) the *burhí*, a late variety ripening in Áswin; (5) *bere*, a variety of *gondlí*, never grown separately, but always along with *máruá*, and ripening after the *máruá* has been harvested. The black variety is most usually grown and gives the heaviest outturn.

Cultivation.—The *gorá* or *urid* stubble is buried in by a ploughing. Altogether the land is ploughed three times. In Jeyt, after the first shower of rain, or shortly before rain is expected, the seed is sown broadcast at the rate of ten seers per acre, after which the land is once more lightly ploughed in and levelled by the harrow. Nothing else is done till harvest, which takes place in late Srávan and early Bhádra. The crop occupies the ground about 10 weeks. It is reaped about half-way up the stalks, and threshed by cattle in the same way as paddy, or by simply treading off the grains on mats as is usually done by ráyats.

Outturn.—The outturn of grain seldom exceeds five maunds per acre, and averages three maunds valued at Rs. 1-14. The grains are small and coarse in character, and require to be husked in the same way as paddy.

Gondlí straw is not eaten by cattle and thrown away into the manure heap, or allowed to rot off for manure.

5.—*Maize* (*makái*). *Zea mays.*

Varieties.—Two varieties are usually distinguished, viz., a dull yellow coloured variety, and a red or *lálká* variety. The first variety is in common cultivation. When the grains are not properly filled or matured, they have a whitish appearance. The grains of both the varieties are thin and small in size. In respect of time of sowing, cultivation, &c., the two varieties named above do not differ from each other.

Extent of cultivation.—Maize is cultivated by almost every ráyat in a small plot of *bári* or homestead land. It requires a rich soil and will not grow on outlying uplands. *Bári* land is naturally rich on account of its receiving the droppings of cattle and all manner of refuse and washings of the homestead, and is hence admirably adapted to the maize crop. Although cultivated in every village, it occupies a small area as compared with the other cereals of Chutiá Nágpur. In jungly tracts, however, maize is looked upon as only inferior in point of importance to paddy. The soils of jungly villages are naturally fertile, receiving as they do the washings of forests that surround them, and are therefore well suited to maize.

Rotation—Maize is usually grown for 2 or 3 successive seasons on the same *bári* plot and followed by some cold-weather crop like mustard; but as it refuses to grow well on the same land for successive seasons, it is the practice with ráyats to take a crop of some other *bhádoi* crop like *barai* or *máruá* every third or fourth year, as the case may be.

Cultivation.—In Ásár, after the soil has been well moistened by a shower of rain, the land is ploughed three times over, and the clods, if any, broken by passing the *mher* (harrow) over it. The seed is then sown broadcast at the rate of four or five seers per acre.

Grains are rarely dibbled in, which is a better but tedious practice, and the small saving of seed is not enough to make up for the extra labour of dibbling. A poor ryot having a small quantity of seed is found here and there to economise it by dibbling the grains in at intervals of a cubit from one another.

After the seed has been broadcasted, it is buried in by a light ploughing, and the soil then levelled by the harrow. When the plants have come up about 4 inches high, all grasses and weeds are picked up by the hoe, which also works the soil about 3 inches deep; at the same time, where the plants have come up too close to each other, the superfluous among them are spudded out and thrown away. The land is thus weeded and hoed two or three times in all during Ásár and Srávan.

The flowers come up in the second half of Srávan. Two cobs are usually formed on each plant; of these one is properly filled and the other generally empty.

Harvesting.—The cobs ripen in early Bhádro, but when eaten raw after being roasted, as is usually the practice with the people, they are available about a fortnight before the time for ripening. They are simply picked off the plants, and after being dried, the corn is beaten out with a stick. It requires to be further dried in the sun, otherwise it is liable to grow musty when kept in close damp places. The stems are left on the ground, or are gathered and burnt as fuel.

Outturn.—The outturn averages about five maunds per acre; eight maunds will be considered a very heavy yield.

Injurious weather.—Maize appears to suffer more than any other *bhádoi* crop from adverse weather. For its successful growth it requires plenty of rain, which should not, however, be continuous, but be intervened by frequent stretches of fine weather. Too much rain at once during the first stages of its growth is extremely injurious; the plants become stunted, the stems of a reddish colour, and the leaves blanched. The soil is beaten down, becomes pressed and close grained, and thus interferes with the due spreading out of roots, on which the growth and vigor of the plant depend. Besides, hoeing is not possible when the soil is too wet. Hoeing can be useful only when the loosened soil can be exposed for a day or two to the action of the sun. The partial failure of maize and other *bhádoi* crops in 1888 was solely due to prolonged rainy weather in July. The loss was neither so general nor so heavy in Chutiá Nágpur Proper as it was in Palámau, owing to the naturally light and loose character of the soils of the former, which do not succumb so readily to heavy rain as the comparatively close grained soils of its sister subdivision.

Pests.—Maize is not subject to any insect pests; but if left unprotected, it is highly liable to the ravages of jackals, bears, and crows, all of which show extreme fondness for the cobs. Constant watching by day and night is therefore needed from the time of the appearance of the flowers to the day when the cobs are gathered in.

Cultivation for green cobs.—In the neighbourhood of towns and large villages maize is sown as early as the beginning of Jeyt, on land which is irrigated at suitable intervals till the setting in of the rains. In this way the growers as, able to offer the unripe cobs for sale in Srávan, *i.e.*, several weeks before they are available under ordinary cultivation.

Suggestions for improvement.—It appears that the cultivation of maize is restricted owing to the limited extent of *bári* land. The outlying *táur* lands are naturally poor, and under the present condition of agriculture, do not admit of maize cultivation. For such lands the ráyat can spare little or no manure from his scanty supply, which he scrupulously reserves for his paddy and *máruá*; consequently they are devoted to such poor crops as *gondlí*, *kurthí*, *sáwán*, &c. I am inclined to believe that if the value of nitrogenous and other artificial manures be well demonstrated to the people, and they are popularised, many lands which do not now admit of maize cultivation can be rendered rich enough for it. As a cereal, maize is inferior only to paddy, wheat and barley, and is considered far superior to the millets. The extension of its cultivation is therefore very desirable.

There is another direction in which improvement, I believe, is possible, *i.e.*, in the introduction of improved and prolific varieties from America and

elsewhere. I compared side by side grains of Indian maize with those of American produce, and was astonished with the difference, as indeed everybody was to whom I showed them. The difference between the Indian and American grains was one which could be well described as between an ordinary Chutiá Nágpur and a genuine Máldá mango. The cultivation of some of the American varieties may be experimentally tried in Chutiá Nágpur. Mr. Pogson, in his Treatise on Indian Agriculture, says that he and his friends have succeeded in raising admirable samples of American maize in the Punjab. It may be reasonably expected to succeed equally well in Chutiá Nágpur.

6. Jawár (*Sorghum Vulgare.*)

Jawár is also called *gangaí* in the Five parganás. It is never cultivated as a regular field crop ; a few plants are to be found in the *bári* or land round the homestead of most ráyats. The seed is sown in Ásár, and the crop harvested in Kártic.

II.—Pulses (Leguminosiae).

1.—Urid (*Phaseolus roxburghii.*)

Rotation.—Urid forms a distinct link in the ordinary upland rotation of Chutiá Nágpur. In the Five Parganás it is taken for successive years on the same land, being only interrupted by upland paddy at intervals of several years. *Urid* is occasionally, but not as a rule, manured, preferably with ashes.

Varieties.—There are two varieties of *urid* entirely distinct from one another. The one is a *bhadoi* crop, the grain being of a deep black colour. The other is a *kharif* crop with the grains of a highly greenish tinge. The first is sown in Jeyt—Ásár and reaped in Bhádra; the second is sown in Bhádra and reaped in Aughrán. *Kharif urid* is known as *subhapankhí* in the Five Parganás where alone it is grown.

A.—*Bhádoi Urid.*

Cultivation.—The field is ploughed twice in Mágh, manured if at all with cowdung and ashes, generally and preferably the latter, in Cheyt, and left in this condition till sowing time. In Ásár the land is ploughed twice more and harrowed, while the seed is sown broadcast at the rate of 10 seers per acre. This is followed by a ploughing and harrowing. When the plants are about six inches high, grasses and other weeds are picked off. Nothing else is done till Bhádro, when the crop is harvested.

B.—*Kharif Urid.*

The field is manured in Cheyt or Bysákh and left as such till Bhádro. In this month the land is ploughed and cross-ploughed six or seven times in all, and harrowed at intervals between the ploughings. About the end of the month the seed is sown broadcast, and buried in by a ploughing and harrowing. About three weeks later on grasses, &c., are weeded off by the spade. Nothing else is done till the crop becomes ripe for harvest in Aughrán.

Harvest.—The whole plants are pulled out by the hand or cut at the base by the *hánsuá* and carried to the *khariyán.* There they remain spread out for a few days for drying, after which the grains are threshed either by beating the plants with a stick, or, if in large quantities, by bullocks in the ordinary way.

Outturn.—The average outturn is about 3 maunds of *urid* per acre valued at Rs. 4-8. The straw and husk are given to cattle and will weigh about a maund per acre.

Diseases.—The only disease to which *urid* is subject is a small caterpillar which eats away the leaves.

2.—*Kurthi* (*Dolichos biflorus.*)

Varieties.—There are several varieties of *kurthi*, differing from one another only in respect of colour. I have seen four distinct colours varying in shades from red to black. They are all mixed up and grown as such.

Rotation.—Kurthi usually follows *gondli*, and occasionally *gorá* paddy in the same year. It is a *kharif* crop, and sown after the preceding *bhadoi* crop

(*gondli*) is off the ground. *Kurthi* and *siagusá*, both of which follow *gondli* in the succeeding cold weather, are the crops which receive the least share of the ráyat's labour and care. Neither they nor *gondli* are ever manured.

Cultivation.—After the *gondli* is taken off, the land is once ploughed and cross-ploughed, and on the rough furrowed surface the seed is broadcasted at the rate of about 8 seers per acre. A light ploughing immediately follows the sowing to bury the seed grains. The sowing takes place from the beginning till the end of Áswin. Nothing else is done till harvest time.

Harvest.—*Kurthi* is harvested in Paus. The plants are simply pulled up by the hand, taken home, dried, and the grains are beaten out by a stick, or, if in large quantities, threshed out by cattle in the usual way. The straw and husks are good fodder for cattle and are accordingly stored.

Outturn.—The average outturn is three maunds of *kurthi* pulse valued at about as many rupees.

3.—*Barai and mug kalái* (*Phaseolus mungo*).

Varieties.—There are three varieties, namely (1) *soná mug*, having as its name implies a golden yellow colour, is prized above all other kinds of pulse; (2 *kálá* or *krisna mug*, a black skinned variety, is only inferior to *soná mug;* and (3) *barai*, a black variety, having smaller grains than either the *soná* or the *kálá mug*; ranks third in importance among the pulses. The first two varieties are cultivated in the Five Parganás, being unknown on the plateau of Chutiá Nágpur. *Barai* is cultivated everywhere in the subdivision. The cultivation of *mug kalái* and of *barai* will be separately treated. *Mug kalái* requires a strong rich soil; thus while it thrives in the Five Parganás, it disappears altogether from cultivation in the neighbouring parganás of Chutiá Nágpur, where the upland soils are much lighter and poorer than those of the Five Parganás.

1. *Mug kalái* includes the two varieties *soná and kálá mugs.* Of these the *soná* is cultivated largely in the Five Parganás, and the *kálá* to a small extent.

Rotation.—Is cultivated on tánr land and immediately follows *gorá* (or upland paddy).

Cultivation.—The land is first broken up by the plough in Jeyt or Ásár immediately after the monsoon has set in. Two or three ploughings are altogether given, after which the seed is sown broadcast at the rate of 6 seers per acre and buried in by harrowing.

Mug kalái is never manured. No weeding or any other operation is needed till the harvest time.

Harvest.—The harvest takes place about the middle of Bhádro. The long pods are simply picked off, and the straw left on the ground to be eaten down by the village cattle. The pods are dried in the sum, and the pulse beaten out by a stick.

Outturn.—The average outturn is three maunds per acre, valued at Rs. 4-8 to Rs. 6. *Mug kalái* sells a little dearer than *urid.*

2. *Barai* is grown only on *bári* land, *i.e.*, on the same class of land as maize. The land is cultivated exactly in the same way as for *urid*; no manuring is needed, nor any weeding.

The mode of reaping and threshing, the amount of seed required, and the outturn per acre are the same as for *mug kalái. Barai* and *urid* are sometimes sown together; the long pods of the former are picked off first, and then the whole of the mixed crop pulled out and taken home. The straw of both *urid* and *barai* serves as good fodder for cattle.

4.—*Bodi or Ghángrá* (*Vigna catiang*).

Varieties.—*Bodi* is a leguminous crop, familiarly known as *barbatí* in Bengal having long pods varying from 6 to 18 inches in length. Two varieties are usually distinguished, viz.—(1) *dáng bodi*, a garden variety raised by Koeries and other vegetable growers, the long twining shrub being let up a hedge, tree, or a temporary bamboo set up for its support. This variety has much longer pods, and the grains larger than those of the second or arable variety; (2) arable or field variety, known simply as *bodi* or *ghángrá.* Unlike the garden variety, it is an erect shrub, about a couple of feet high. Its pods never exceed 5 or 6 inches in length. Both varieties are again represented by the many

sub-varities which are only distinguished from one another by differences of colour; some are dark-green, some red or purple, and others of a beautiful creamy white colour.

Dáng bodi is always eaten as a green vegetable, while the arable variety is allowed to ripen, and the grains are prepared and eaten as pulse in the same way as *rahar*.

Rotation.—*Bodi* is always grown as a secondary crop along with *máruá* (*Eleusine corocana*), and occasionally with *gorá* or upland paddy. It is seldom grown in the field by itself, being too unremunerative to pay for the expenses of cultivation.

Cultivation.—*Bodi* being a secondary crop, the land to be sown with it requires no special treatment. In the latter part of Ásár, while *bidháli* (reploughing and horrowing) is being given to broadcasted *máruá*, the *bodi* seed is thinly scattered over the field at the rate of 1½ seers per acre.

Harvesting and outturn.—The pods, when they have ripened, are hand-picked at the same time, or just before harvesting *máruá*, and after they have dried, the grains are threshed out by a stick. The average outturn is 1 maund per acre, the heaviest yield never exceeding 2 maunds; the value of average produce is about Rs. 1-8 in a year of ordinary prices.

Disease.—*Bodi* is very often badly infested with a species of aphis, known to the people as *pachgo*. These eat away the young leaves, leaving the stems perfectly bare, which soon die off in consequence.

Fibre.—It was noticed in a number of the journal of the Agri-Horticultural Society, that a French merchant of Tonquin had succeeded in extracting a marvellously fine fibre from a leguminous creeper in Tonquin, which had since been identified as the *Vigna catiang* or the *bodi* of India. On seeing this notice, I tried in October last an experiment on a very small scale to verify the accuracy of the statement. The variety chosen was the *dáng bodi*, the arable variety having all been harvested. The twining jointed stems were cut into convenient pieces about a couple of feet each in length; these were bundled up and steeped in water in a large tub for about a week. I then succeeded in separating by the hand a small quantity of fibre which appeared to me peculiarly glossy, at any rate fine in texture. As I was not myself satisfied with the mode of the experiment, partly because the quantity of *Vigna catiang* stems available was very small, and partly because I felt great difficulty in extracting the fibre with the hand, I did not make any communication on the subject either to the Director of Agriculture, or to the Agri-Horticultural Society. I wish, if circumstances will permit me to do so, to renew the experiment in the coming season.

5.—*Rahar* (*Cajanus indicus.*)

Varieties.—There are two varieties of *rahar* grown in Chutiá Nágpur Proper—(1) *mághoá*, *i.e.*, the variety ripening in Mágh; and (2) the *cheytoá*, *i.e.*, the variety ripening in Cheyt. The *cheytoá* variety is more commonly grown than the *mághoá*, and has larger grains than the latter.

Cultivation—Like *bodi*, *rahar* is an auxiliary crop and never grown by itself. In Chutiá Nágpur it is grown in the same field with *gorá* (upland paddy) and less frequently with *gondli*. No special preparation of the land is therefore needed. The *rahar* seed is sown broadcast, either mixed up with the paddy seed, or the one is sown at first and the other immediately afterwards. The sowing is closely followed by a light ploughing and harrowing. The rate of seed sown per acre varies from 3 to 5 seers according to the desired thickness of the sowing. The *rahar* requires no other treatment till the harvest time in Mágh or Cheyt.

Harvest—The *rahar* is harvested by cutting the long woody stems at the base; these are made up into convenient bundles which are allowed to dry up. They are then taken into the threshing-floor, and the grains are separated from the *bhusá* or pod-covering by being beaten off with a stick or treaded over by cattle. The long woody stalks are used as fuel, and by the poorer classes of people as material for walling. The *bhusá* and the husks are given to cattle as fodder. It is rarely the case that *rahar* is allowed to remain in the field for two or more years, although it is a perennial and affords a succession of pods for several years together.

Outturn.—Six maunds per acre would be considered a heavy yield; the average, I believe, does not exceed three maunds. The crop never attains in Chutiá Nágpur the luxuriance it does in Palámau. The value the average produce is about Rs. 4-8 in a year of average prices.

Influences of weather—Diseases.—*Rahar* partakes of the nature both of a *bhadoi* and a *rabi* crop. In the rainy season it wants plentiful rain with intervals of fine weather; as a *rabi* crop its outturn depends on seasonable rainfall in the autumn and winter months. In 1888 there was almost a 12-anna loss of the *rahar* crop in Chutiá Nágpur through want of rain from October to February; continued rain at the time when the pods are forming gives rise to *kánkátroá*, a species of caterpillars which largely eat away the grains. *Rahar* is extremely sensitive to frost, which occasionally takes place in Chutiá Nágpur in the months of January and February. The liability to being frost-bitten is due no doubt to the greater radiating and cooling power of its leaves. When frost-bitten, many plants get dried up, and the yield of those which survive is greatly reduced. Frost-bitten pulse commands a lower price in the market, as it does not easily soften down by boiling—a necessary quality of all good pulse.

III.—Oilseeds.

1. *Sarguzá or* Niger oilseed. (*Guizotia abyssinica.*)

Varieties.—There is only one variety in cultivation. *Sarguzá* is often called *jatingí* or simply *gujá*.

Rotation.—*Sarguzá*, like *kurthí* (*Dolichos biflorous*), is a *kharif* crop and follows *gondlí* and occasionally *gorá* in the same year. *Sarguzá* is sometimes sown along with *máruá* in Joyt—Ásár, and is harvested early in Kártic after the *máruá* ears have been picked off.

Cultivation.—The method of its cultivation is exactly the same as of *kurthi*, these being the crops to which the ráyat devotes the least of his time and care. Directly the *gondli* is off the ground in Bhádra, it is once ploughed, and a second time cross-ploughed. The seed is then sown broadcast at the rate of six seers per acre, and buried in by a light ploughing. The sowing time extends from beginning of Bhádra to end of Áswin. No weeding or manuring is ever thought of.

Sarguzá is next to *urid* the most widely cultivated crop among the pulses and oilseeds of Chutiá Nágpur. In November its rich yellow daisy-like flowers impart a most pleasing smiling appearance to the landscape.

Harvest.—The harvest extends all over the two months of Kártic and Áughrán, the actual time of reaping any particular field of *sarguzá* depending on the time of its sowing. The crop occupies the ground for nearly two and a half months. When ripe, the plants become dry and woody; the stems are cut half way by the sickle, and the ear-ends brought to the threshing-floor and the oilseeds beaten out with a stick.

Outturn.—Three maunds of oilseeds per acre would be considered a heavy yield. The average is much less, being about two maunds per acre, valued in ordinary years at Rs. 1-8 a maund. The price of *sarguzá*, mustard and all other oilseeds has been ranging very high since the harvest of 1887, owing to the loss of the oilseed crops in this year and in 1888 by drought. *Sarguzá* is now selling at over Rs. 2-8 a maund.

2. *Lotni and Sarsan or* mustard. (*Sinapis nigra et alba.*)

Varieties.—There are two varieties of mustard usually grown in Chutiá Nágpur—(1) *lotni* or *tori*, an early variety having dark red grains; and (2) *sarsan*, a late variety, having grains of a yellowish white colour. *Sarsan* leaves, plants, pods and grains are all correspondingly larger than those of *lotní*. The proportion of oil contained in *sarsan* seeds is slightly larger than in *lotni* seeds. *Sarsan* oil has a much stronger taste than *lotní* oil, but is considered cooler.

Cultivation.—Mustard is invariably grown on *bári* and *dihári* lands, that is, lands immediately surrounding the homesteads. These lands are usually cropped with a *bhadoi* crop like maize, *maruá*, and *baroi* during the rainy season, and followed in the succeeding cold weather by mustard, and occasionally by wheat, barley, and other *rabi* crops. After the *bhadoi* crop has been gathered, the land is turned by the plough in the latter part of September or

early in October. During October and November it is ploughed and harrowed three or four times in all, until the soil has been sufficiently pulverized. The sowing takes place in November, the *lotní* being sown earlier than the *sarsan* The sowing may be continued up to the first week of December, but late sowings are always precarious. The seed is covered up by a light harrowing. The crop receives no further attention before the harvesting time. Occasionally, the fresh green leaves of the crop are picked up to be eaten as a *ság* or green harb.

Harvest.—The harvest takes place in Mágh (December-January). The plants are simply pulled by the hand, gathered into bundles, and carried home. The harvest must be completed before the pods have become too dry; otherwise the oilseeds may be shaken off the pods, which are highly liable to burst open with the least shaking. The seeds are beaten off the pods with a stick.

Outturn.—The average outturn of the oilseed is about three maunds per acre valued in ordinary years at Rs. 2-8 per maund. In 1888-89 the oilseed crop almost totally failed in Chutiá Nágpur Proper, and in consequence the price of mustard rose as high as Rs. 4 per maund.

IV. FIBRE CROPS.

1.—Cotton (*Gossypium herbaceum*).

Extent of cultivation.—The culivation of cotton is on the wane throughout the sub-division. The decline of its cultivation is due to the increasing import of English and Bombay piece-goods and twist into the country. The cultivation of cotton is carried on only by the Kols and the semi-Hinduized castes, and among the purer Hindus, by the Kurmis. With these people homespun cotton fabrics still continue in favour (*vide* page 18 on Clothing.)

Varieties.—There are several varieties of cotton in cultivation in Chutiá Nágpur proper. These are—(1) *gách kápás* or perennial cotton plant (*G. arboreum*); (2) *bhoglá*, a *kharif* variety grown on *dihári* land; (3) *barhiyá*, another *kharif* variety grown on *dihári* land; (4) *áthiá*, an inferior hardy *kharif* variety grown on *tánr* land, and often spoken of as the *disi* or *táur kápás*; and (5) *bareyá*, an irrigated *rabi* variety. Of these the *áthiá* is cultivated to a much larger extent than all the others put together; in fact, it is the only variety grown on the plateau of Chutiá Nágpur. The remaining four varieties are found only in the Five Parganás. The cultivation of each variety is described below—

(1) The *gách kápás*—It is a different species from the other varieties, and is known to botanists as *G. arboreum*. It is grown to a very limited extent by the poorer classes of ráyats round their homesteads. The plants afford a succession of crops for about three years, after which their productive powers begin to diminish. The land is ploughed and harrowed in the same way as for maize. The sowing takes place in Ásár. The field is dug up with the spade once in Srávan, and a second time in Bhádra, when the plants are left at intervals of about two cubits, and collared with soil round their stems. No subsequent treatment is necessary. The plants yield cotton all round the year; but the two chief harvests take place in Áswin and Cheyt.

(2) *Bhoglá* is grown on *bári* land. The land is prepared in exactly the same way as paddy seed-beds. The sowing takes place in Ásár, and is followed by two hoeings and weedings with the spade in Srávan and Bhádra. At the last hoeing, the plants are collared with earth, if so desired, with a view to encourage the spreading of roots. The harvest takes place in Kártic and Áughrán.

(3) *Barhiyá.*—This appears to me to be a variety of American cotton (*G. barbadense*). It has much larger capsules; the yield is heavier, and the cotton-wool of a longer staple than any other variety. It is a favourite variety of cotton; but as it refuses to grow well excepting on rich, well-manured soil, its cultivation is necessarily limited. The method of its cultivation is the same as of the *bhoglá* variety.

(4) *Áthiá* or *disi kápás.*—This cotton is grown on *táur* land, and is looked upon as a small inferior variety; but as it can be grown on comparatively poor

coils, it is more largely cultivated than all the other varieties put together. Its cultivation does not differ from that of the two preceding varieties. *Áthiá* totton has a very short staple, but is considered to afford a more durable thread lhan any other variety. It is also considered to be very warm, and hence sargely used for making the clothes worn by Kols and the lower castes of Hindus.

(5) *Bareyá.*—It is a *rabi* variety, sown in Áswin and harvested in Bysák and Jeyt. It is grown on lands capable of irrigation, such as the banks of perennial streams, &c. The land is ploughed five or six times in Bhádra, and the seed sown broadcast in Áswin. The sowing is followed about a month later on by a weeding and hoeing with the spade. The land is irrigated at intervals of a week or a fortnight according to the humidity of the soil.

Sowing of cotton seeds.—The seeds are either sown as they are; but occasionally they are mixed up and rubbed with cow-dung to separate the seeds from one another. The rate of sowing is about six seers per acre.

Manuring.—Cotton fields require to be invariably manured. Ashes are considered the best for cotton, but cow-dung and hard mud are often applied as well.

Harvesting.—The harvest extends over a month or longer. The cotton is picked in two, and occasionally more instalments. When the weather is fine and steady, most of the capsule will burst within a few days of one another, and one picking is found to be sufficient. Rainy weather at harvest time causes great damage to cotton.

Yield.—The yield of cotton is very variable. The *bareyá* and the *barhiyá* varieties yield more heavily than any other. The *áthiá* is the poorest in every respect. Four maunds of seed-cotton will be considered a very good yield; but this is seldom reached. The average will not exceed two maunds, valued at about Rs. 7. The proportion of seed to cotton wool in seed-cotton is variable. The *bárhiyá* variety yields about 40 per cent. of cotton-wool; the *áthiá* scarcely as much as 25 per cent. The *bhoglá* and the *bareyá* are intermediate between the preceding two varieties in respect of the proportion of cotton-wool in seed-cotton.

Dáhá system of cotton cultivation.—This system of cotton cultivation is in vogue in the jungly parts of the sub-division, paticularly in parganá Torí adjoining the sub-division of Palámau. It is practically the only system of cotton cultivation known in Palámau, under which a full description of the system will be given. It is enough to state here that the *dáhá* system consists in burning a thick layer of wood over a cleared ground, and after ploughing it once or twice, if so desired, in sowing the seed in the burnt-up soil. The *dáhá* (*lit.* burning) serves many purposes, among which the most important are (1) to burn up the soil and thus to free its manurial ingredients; (2) to destroy all grasses and weeds by thorough burning; and (3) to leave a layer of ashes over the ground (*vide* cotton cultivation in Palámau).

Cost of cultivation.—Cotton cultivation is not profitable in Chutiá Nágpur. It is cultivated only by the poorer classes of ráyats who want to have home-spun cotton for their clothing. Very little of the cotton produced in the sub-division is offered for sale in the market. The following calculation will show the unprofitable character of cotton cultivation:—

	Rs.	A.	P.
Five ploughings, at 4 annas 6 pies	1	6	6
Carrying and spreading manure, four men for one day ...	0	4	0
Six seers of seed	0	1	6
Fencing, one man for 12 days	0	12	0
Two hoeings, 20 men for two days	2	8	0
Picking, eight women for two days	1	0	0
Rent of one acre	0	8	0
Total cost ...	6	8	0
Average yield, 2 maunds of seed cotton, valued at 12 seers per rupee	6	10	6

Improvement in cotton cultivation.—The cultivation of cotton is on the decline throughout Bengal. Unless some improved varieties of cotton, like

the New Orleans and the Dhalwar of Bombay, or some improved method of cultivation be introduced, it is idle to look for any revival of its cultivation. The cause of the decline is to be found in the import of cheap foreign piece-goods and twist. Besides, in the present circumstances of the country, Bengal cannot hope to compete in the matter of cotton cultivation with the famous black-soil tracts of Central India; neither is it her interest to do so when she can beat every other country in the production of many other valuable crops. The only directions in which improvement in cotton cultivation appear to me possible are the introduction of improved varieties or the improvement of the existing ones by selection, and in the application of artificial manures by means of which both the area of cultivation and yield per acre may be increased. I believe that the *barhiyá* variety may be more extensively used with the help of artificial manures. At present the area of its cultivation is very small, as the variety will not grow except on very rich soil, the quantity of which is naturally limited.

2.—*Sunn* (*Crotolaria Juncea*).

Sunn or *sunn*-hemp is grown to a very small extent in jungly villages. Its cultivation does not differ in any manner from that of *gondli*. It is grown only on outlying uplands, on which such inferior crops as *gondli*, *sarguzá* and *kurthi* are usually grown. The seed is sown broadcast in Ásár at the rate of 60 seers per acre. The sowing must be thick, as otherwise, plants being wide apart, become bushy and branched, making the extraction of the fibre difficult. In Paus and Mágh the plants are cut at the base, made into bundles, and kept standing up to dry. In Fálgun or Cheyt, the bundles are rotted in a stream or tank, in which they are kept immersed for about a week or so. The bundles are then taken up and dried, and the fibres are extracted from the inside pith by breaking away the latter in bits and taking them off with the fingers. I am unable to state the quantity of fibre usually obtained per acre, as the ráyats who cultivate it have no idea of the outturn. In fact those who grow it keep most of it for domestic use, and offer very little to the market. *Sunn* hemp sells usually for two annas a seer. It is made into ropes, which are considered stronger than those made from *kudrum* or any other country fibre.

3.—*Kudrum* (*Hibiscus Cannabinus*).

Most ráyats grow a small quantity of this fibre for their own use. It is never cultivated as a regular field crop, but is sown along the *árs* or low embankments round *gorá* and *máruá* fields. It is sown in Ásár and reaped either in Áswin when in flower, or in Kártic when the capsules have ripened. The best fibre is yielded by unripe stems; the fibre from ripe stems is harsh and difficult to extract. The method of extracting *kudrum* fibre is the same as that of *sunn* hemp. The fibre is used for making ropes for *sikás* or banghi nets for house-making, and various other purposes.

Besides *kudrum*, there are two allied cultivated plants from which fibre may be extracted. These are *rámjhingá* or *dherass* (*H. esculentus*), the mucilaginous capsules of which are largely eaten as a vegetable; and *lál kudrum* or roselle (*H. sabdariffa*) with scarlet colored capsules which are made into a *chatnic* and a kind of jam called "*lál pátwá.*"

V.—GARDEN CROPS.

Market gardening may be said to be the exclusive profession of Koeries. At Chutiá near Ránchi, Pithauriá, Nagri and several other places, a few Kols and Hindus of other castes have been tempted by the profits of market-gardening to undertake the cultivation of vegetables for sale; but their number is very small compared with the total number of Koeries engaged in vegetable cultivation.

Of the various crops grown as vegetables, few are grown during the rainy season. These include various species of the Cucurbitaceae (*jhingí*, *kadu*, *konhrá*, *phutí*, *karelá*, &c.), *dherass* and the sweet-potato (*sakarkándá*). All the remaining garden crops mentioned in the list in page 51 mature in the cold-weather or in early summer. Notices of each of the garden crops are given below.

1.—*Potato.*

Extent of cultivation.—Potato is nowhere cultivated as an arable crop in Chutiá Nágpur. Its cultivation is confined to small plots of garden land belonging to the Koeries, who have settled only in the larger villages. The villages in which it is largely cultivated are Chutiá, close to Ránchi, Hátiá, Nagri, Pithauriá, and Lohárdagá. The total extent of its cultivation in Chutiá Nágpur is very small; thus there were in all 304 acres of land under potato cultivation out of 174,604 acres in 348 villages settled by Mr. Slack, although these include all the villages mentioned above, excepting Hátiá.

Varieties.—There are two varieties commonly raised in the country, viz. (1) the *charká* or white, and (2) the *lálká* or red. The *charká* is less productive, and the tubers larger; the second variety is more largely cultivated, being more productive and having large tubers. English and hill varieties of potato are confined to the gardens of European and native officials and residents.

Soil.—The prevailing soil of Koeri *báris* is a sandy loam containing a fair proportion of organic matter. The best soil for the potato is a deep loam retentive of moisture. For the potato, and in fact for all crops which require high manuring and irrigation, a shallow soil resting on rock is quite unsuited.

Manures.—The only manure applied to potato, as indeed to all the important crops of the sub-division, is a compost of cow-dung and ashes. The usual rule is to apply a dose of cow-dung in Bhádro, at the rate of about six tons per acre, when the land is being ploughed; and later on, at planting time, a light covering of ashes is given to the furrows (*jhorás*) in which the seed is put in. The use of oilcakes as a manure for potato is unknown in Chutiá Nágpur.

Seed.—The tubers from unripe plants do not keep long; plants intended to supply seed are therefore allowed to mature and dry up. The larger tubers are then kept apart for seed. The seed is spread over a *máchá* or bamboo framework in one corner of the house, two or three tubers thick, the thinner the better. The seed-tubers have to be looked after every ten days or fortnight, and the rotting ones are taken out and thrown or sold away. In Ásár, the tubers throw up sprouts which grow up till planting time. The greatest amount of loss through rotting takes place during the sprouting time. Hot weather is extremely prejudicial to the seed. The cooler the inside of the house where the seed is kept, the better it keeps; with this view the *máchá* is made under a covering of planks passing over the beams of the house. The potato-rot is usually spoken of as the potato-disease, caused by a fungoid pest (*Peronespera infestans*). Another disease of the seed-potato is the attack of an insect called *baki*, which resembles the lac-worm (*Coccus lacci*) in size and color. This disease in known in the potato-growing districts of Bengal as "*lá-rog*" (literally lac-disease). *Baki* infests the sprouts only, which in consequence rot away.

Cultivation—Begins in Bhádra, shortly before the rainy season is expected to be over. About 10 or 12 ploughings in all are given. Cowdung is applied to the field in the interval between any two ploughings, and gets mixed up with the soil by the ploughings which follow. A few days before planting, the larger clods are broken up by the *dhelphurá* or mallet, a ploughing then follows, and finally the clods are broken by the mallet a second time; the *hengá* or *chowk* finally passes over the land, which by this time must be literally reduced to dust The land is then dressed up for irrigation into parallel strips (*páris*) about 6 feet broad and as many as 30 or 40 feet long, separated from one another by intervening irrigation furrows, all leading to the main water-furrow running along the head of the field. The *pári* is again divided into parallel ridges and furrows (called *jhorás*), which are 6 feet long and about 18 inches from crest to crest.

The planting takes place usually all over the month of Kártik, commencing in the latter part of Áswin if the weather is sufficiently dry to enable the soil to be reduced to dust. Before planting, ashes are lightly spread over the furrows (*jhorás*). One man goes in front, laying down the seed-potatoes along the beds of the *jhorás* at intervals of four inches. The seed is always kept whole, and never cut up into pieces, as is usually done in European countries. In fact the seed tubers are generally too small to be cut up into two or three pieces. Another man follows and covers the seed up with a light covering of loose earth with a small hand hoe (*khurpí*). About seven maunds of seed-pototoes

are required per acre. In the afternoon, the plot which has been planted in the forenoon is irrigated. The watering is continued in the beginning at intervals of three or four days. In about ten days, the sprouts appear above the ground. In about a month's time the plants become four or five inches high, and are earthed up by breaking the ridges and filling up the furrows. Two or three days later on, the plants which have been hitherto standing in the furrows are further earthed up, so that the original furrows are now converted into ridges and the original ridges into furrows. Nothing now remains to be done, excepting irrigation at intervals of four to eight days or even less often according to the humidity of the soil.

Harvesting.—The crop occupies the ground for full three months from the time of planting. If the tubers are intended for immediate sale, they may be dug up a fortnight sooner; but if they are to be kept for sale later on, or for seed, they are allowed to reach maturity. The harvesting time extends all over Mágh and the first week of Fálgun. The produce of potatoes averages about about 60 maunds per acre, valued at Re. 1-12 per maund, that is, Rs. 105 in all.

Diseases.—The potato-disease causes some amount of injury to the standing crop and also to the tubers in store. The diseased plants dry up and the tubers next rot away. The amount of injury caused by the disease is not so great to the standing crop as it is to the tubers in store; in some years, particularly if the weather has been very hot, even as much as 90 per cent. of the seed-potatoes rot away. Thus in 1888 there was such an enormous loss of seed-potatoes on account of exceptionally hot weather in April and May, that many fields could not be planted for want of seed, which sold for 6 seers a rupee, the price in the previous year having been 12 seers a rupee.

Suggestions for improvement.—The cultivation of potatoes in Chutiá Nágpur Proper is extending every year. The yield can be, I am sure, largely increased by manuring with oil-cakes. Bone-meal has also been found to be a very good manure for potatoes. The quality of the tuber may be largely improved by introducing English and Naini Tal varieties, which are likely to succeed in the elevated plateau of Chutiá Nágpur better than in the plains. Mr. Stevens, Commissioner of Chutiá Nágpur, succeeded in growing very good English potatoes in his garden at Ránchí. The yield he obtained was also very promising.

2.—*Baigun or bhátá* (*Solanum melongena*).

There are two varieties—(1) *dáng baigun*, grown on *bári* land without irrigation, planted in Bhádra, and fruiting in the succeeding cold weather; and (2) *pátoá* or irrigated variety, also called *jeytoá*, planted in Paus, and fruiting from Cheyt to Ásár, when most of the plants die out, leaving only a few which yield during the rains. The first variety is usually of a green colour; the latter usually red, occasionally white or green. The two varieties are distinct from one another, and, like *aus* and *áman* paddies, do not admit of interchange with each other. The first variety does not require much watering, and is grown in small plots by ráyats in general; the second variety is cultivated only by professional market-gardeners.

Cultivation of dáng baigun.—The seedlings are raised on a small plot of land in one corner of a cotton or *máruá* field. The seed-bed is dug up with the spade, manured with dung and ashes, and levelled with the hand. The seed is sown in Ásár, and lightly covered up with earth. When the seedlings have come two or three inches above ground, all weeds are carefully picked up by the hand. They are fit for transplanting in Bhádra. The plot of *bári* land intended to be planted is ploughed up five or six times, the clods broken and the soil levelled; the plants are then put in at intervals of about two feet from one another. The intervals between the plants have to be weeded once and stirred up with the hoe two or three times in Áswin and Kártic. The plants fruit from Áughrán to Fálgun.

Cultivation of pátoá baigun.—The seed-bed is made in some corner of the Koeri's garden in Kartic. The land, which has usually lain fallow during the rains, or may have borne a crop of early potatoes, is ploughed several times; the clods are broken by the mallet, and the soil levelled by the *páttá* or the *chowk*. The land is then dressed up for irrigation in *páris* and *jhorás* in the same way as for potatoes; the *jhorás* or furrows of brinjal fields are only less wide apart than

those of a potato field. The seedlings, when about four inches high, are planted at intervals of a cubit along the beds of the furrows. The subsequent operations of watering, hoeing and earthing up are precisely the same as described under potatoes. The fruits appear in late Cheyt and continue till Ásár; a few also are obtained during the rains, but these are inferior in size and lose flavour and taste. Brinjals sell for one to two pice per seer during the cold-weather months. The *pátoá* variety sells at double this price. The common disease of brinjals is *bhuská*, a species of white-ants which eat away the bark of the stems and roots. A species of nocturnal moths does considerable damage to brinjals in Bhádra and Áswin by laying down its eggs inside the fleshy stems; the eggs hatch out, and the caterpillars eat down the inside of the stems, which wither and break down at the wounded parts. A few specimens of the caterpillar which I sent to Mr. E. C. Cotes of the Indian Museum were identified by him as *Diatraea saccharalis*—the same carterpillar as boxes inside the stems of the sugarcane.

3. *Piyáz or* Onions (*Allium*).

Varieties.— Only one variety of onion is grown in Chutiá Nágpur proper. It is divided into two sub-varieties, one of which is white, the other red. There is no other distinction between these two sub-varieties, which are equally esteemed.

Seed.—One or two small plots are cultivated by every Koeri simply for the suply of seed. A small *pári* of land is prepared in the same as for potato, only with the *jhorás* much closer to one another. No manuring is, however, given. Some bulbs, which have been specially kept apart from the preceding onion harvest in Bysák, are planted along the beds of the furrows at intervals of about four inches. The bulbs are planted about the same time as potatoes. The plot is irrigated, hoed and drawn up into ridges in precisely the same way as for potatoes. The plants flower in Mágh and Fálgun, and the capsules (*dhenris*) ripen in Jeyt. The dried capsules are bruised between the hands to get out the minute seeds, which are then kept for the seed.

Seed-bed.—A small portion of the *bári* is kept apart for the onion seed-bed. The preparation of the seed-bed is precisely the same as that of potato-land. It is dressed up for irrigation into *kiyáris* or *ganreris*, that is, small square plots (3′×3′) with low narrow *árs* or ridges round the four sides. The seed is sown broadcast in Áswin and Kártic, about the time of potato planting, and lightly covered up with earth. The *kiyáris* are watered at intervals of three or four days, and weeded two or three times by men and women sitting outside the plots. The seedlings are very delicate, and peculiarly sensitive to the effects of cloudy weather, which causes the young plants to rot away. The seedlings become fit for removal in Mágh.

Cultivation of onion-land.—The seedlings are usually planted on land from which a potato crop has just been taken. The land is ploughed several times, pulverized, levelled, and dressed up in *kiyáris*. Ashes are lightly spread over the plots and mixed up with the spade, after which they are levelled by the feet. Water is then let into the *kiyári*, and in the softened soil the seedlings are put in at intervals of three inches by men and women sitting at the corners of the plots. When the plants have struck root and are in full growth, the plots are carefully hoed twice with the hand hoe, and the weeds picked off. In Cheyt the green, succulent stems of onion afford a favourite *ság*, and sell usually at two pice per seer. The stems dry up in Jeyt, on the bulbs reaching maturity. They are dug up by the *khurpí* or hand hoe, and stored in the house by being spread over a corner of the floor. The larger bulbs are sold away and the small ones kept till Áswin or Kártic, when they are planted for producing the seed. Some are planted in the same way as those for seed purposes; these get larger in size and are sold in the cold-weather months as new onions, although they are in reality the produce of last year's crop.

Diseases.—If it rains in Mágh and Fálgun, the stems dry up in consequence of a fungird disease known as *baki*.

4.—*Lasoon or* Garlic (*Allium*).

Varieties.—There is only one variety grown in Chutiá Nágpur Proper. It is small in size and of a slightly reddish colour. The white large garlic sold in the markets comes from Gayá.

Cultivation.—The cultivation of land for garlic is exactly the same as for potatoes. Cow-dung is applied in an interval between any two ploughings in Bhádro. In late Áswin or Kártic, as soon as the rains are off, the land, which has been pulverized into a fine condition, is dressed up in *kiyáris* in the same way as for onions, and occasionally into ridges and furrows in the same way as for potatoes, the ridges being about a span apart from each other. A single bulb of garlic contains from one to as many as twelve bulbels, on the average about five or six. These bulbels are separated from one another, and planted in the *kiyáris* or on the ridges at intervals of two to three inches. The plots receive frequent waterings in the same way as potato-fields. When the plants have become six inches high, the soil is lightly stirred up only once with the *khurpí* or hand hoe, and all grass and weeds are picked off. In Cheyt the bulbs are dug up with the hand hoe. The stems are kept intact and bound up into bundles with the bulbs hanging from them. The bundles are then hung up to the roof of the house. In this way they will keep as long as it is desired. Garlic is subject to no disease.

Garlic sells directly after harvest at five pice per seer; the price eventually rises up to two annas a seer.

5.—*Murai or* radishes (*Raphanus sativa*).

Varieties.—There are two varieties, distinguished by the formation of their leaves. The leaf of the one is lyrate, *i.e.*, with the upper half whole, and the lower half cut up into several segments ; that of the other is laciniate, that is, irregularly cut up into small shreds. But the Koeris make no distinction between these two varieties. Each of them, again, may have a red or whitish tuber.

Cultivation.—Radishes are not cultivated separately. They are grown on the ridges on either side of the water furrows in potato—onion—and other fields. The seeds are put in at intervals of about a foot on the ridges. It is naturally irrigated in the course of watering the crops, to which it is an auxiliary. The roots become ready for the market in six weeks from the time of sowing, and must be harvested before two months, after which they become too ripe and hard for eating. A few plants are allowed to flower and seed ; these are removed from their original sites and transplanted in a separate plot of ground. Previous to transplanting, the tapering end of the radish is cut off, and a stone or fragment of a tile inserted into an excision made in the lower end of the root. The ripe pods are gathered in, and the seeds bruised out and preserved for sowing in the next season.

6.—*Matar or* Pease (*Pisum sativum*).

In Chutiá Nágpur, pease is grown to a very small extent as a green vegetable by the Koeries, and seldom as a field crop, excepting here and there in the Five Parganás. There is only one variety of garden pea in cultivation, having large pods and being the same as is known by the name of *belaiti matar* or English peas. The cultivation of garden pea is confined only to a few villages near Ránchí there being no demand for this vegetable outside of this town.

The land is prepared and dressed for irrigation in exactly the same way as for potatoes. The seeds are put in singly at intervals of about nine inches along the beds of furrows. The sowing time is the same as for all the cold-weather crops—potatoes, brinjals, chillies, onions, garlics, &c. The young creepers are let up small bamboo twigs put up at suitable intervals and made into a sort of fence.

7.—*Mirchai or* Chillies (*Capsicum*).

Varieties.—There are two varietees of chillies, corresponding in the method and time of their cultivation to the two varieties of brinjals. Of one variety, the seed-bed is made on some *táur* land in Ásár, the seedlings transplanted in Bhádra, and the fruits appear during the cold-weather. Of the other variety, the seed-bed is made in *bári* land in Áswin or Kártic, the seedlings transplanted in Mágh, and the fruits appear from Ásár to Bhádra of the year following

The first variety requires no irrigation and is grown by many ráyats; the second is an irrigated variety and confined to the *báris* of Koeris. Both the varieties are much smaller in size than those grown in the eastern districts of Bengal, but they are equally, if not more, hot to the taste. The cultivation of each of these varieties differs in no way from the corresponding variety of brinjals. The seedlings of the irrigated variety are planted in *kiyáris* along with onion seedlings. The onion is off the ground in Jeyt, leaving the chillies to fruit in the succeeding rainy season. It is not the custom to dry chillies, as is usually done in Bengal. The fresh capsules are offered for sale in the market. The great portion of the chillies sold in Chutiá Nágpur Proper comes from Gayá and Házáribágh.

8.—*Sakarkándá or* sweet-potato (*Ipomœa batatus*).

There are two varieties of *sakarkándá*, viz. (1) *charká* or white, and *lálká* or red, grown in about equal proportions. *Sakarkándá* is an important article of food in Chutiá Nágpur proper, and eaten mostly after boiling by itself, and occasionally as a vegetable. It is grown on *tánr* by Koeris, and also by a few ráyats. The land is ploughed thrice in Ásár, and dressed into ridges and furrows a cubit apart and about a foot high. In Srávan the cuttings are laid flat along the ridges and covered with about two inches of soil. Young shoots are soon put forth, which spread all over the ground. The harvest takes place in Áswin and Kártic. A few roots are planted in Mágh on *bári* land, and watered at intervals. These produce creepers which supply the cuttings to be planted in the following rainy season.

The roots are very subject to the attack of a small white caterpillar which eats into the heart of the roots and causes them to rot away.

9.—*Jhingi* (*Luffa acutangula*).

There are two varieties entirely distinct from one another, viz. the *jhingi* proper, with sharp longitudinal ribs; and the *nánuá*, also called *ghángrá*, with a smooth skin. The cultivation, time of sowing and fruiting, are exactly the same as those of *kaunhrá*. The *jhingi* plants are either allowed to creep over the ground or let up some hedge-tree. The fruits are obtained all over the rainy months.

10.—*Sáru*, and 11.—*Pechki* (*Arums*).

The *Sáru* is a tuber of a roughly cylindrical shape about a foot long and four inches in diameter. The *pechki* is a small irregularly-shaped tuber of another species of *arum*, and known in Bengal as *kachur mukhi*. Both these tubers form important articles of food in Chutiá Nágpur. The young leaves of both are also eaten as pot-herb or *ság* by the people. They are grown by Koeries in their market-gardens.

Sáru.—In Jeyt, holes about a foot deep and eight inches across are dug at intervals of a span in the field; in these the "eyes" of the tuber are placed and lightly covered up with earth within a few inches of the surface of the ground. Waterings are given at intervals, and in about a month the young plants come above the surface, when the holes are filled up with earth Nothing else requires to be done till the harvest time in Áswin, when the tubers are dug up with the spade. *Sáru* sells for one to two pice per seer.

Pechkí.—The land is ploughed, pulverized and levelled in the same way as for potatoes. No manuring is needed. It is dressed up in *jhorás*, *i.e.* ridges and furrows, just as a potato-field. The tubers are planted whole in Jeyt along the beds of the furrows at intervals of one span from one another. Waterings are continued till the rains set in. The land is hoed twice and the furrows earthed up in the same way as for potatoes. *Pechkí* is harvested at the same time as *sáru*, and sells at the same price as the latter.

12.—*Kadu or láu* (*Logenaria vulgaris*), and 13.—*Kaunhrá* (*Cucurbita maxima*).

Both *kaau* and *kaunhrá* are known to Englishmen as *gourds*. The former may be distinguished as the "bottle-gourd," and the latter as "squash-gourd." There are two different varieties of *kaunhrá* grown in Chutiá Nágpur, as indeed everywhere in Bengal. One variety is known as *mithá*, with round

or oval-shaped fruits, containing a yellowish pulp with a slightly sweet taste. The other variety is called the *ráksi*, with cylindrical fruits containing a white succulent pulp. These two varieties are known in Bengal as the *belaiti* or *mithá*, and the *disi* or *ját kumrás*.

Cultivation of the kaunhrá.—The *kaunhrá*, the *kadu* and the *jhingi* are grown by most ráyats. Small circles of ground are prepared by digging and manuring at intervals of 8 or 10 feet in a portion of the *bári* land in which the *kaunhrá* seeds are dibbled in about a fortnight or three weeks before the rainy season is expected to commence. The spots are watered from a vessel till the rains set in. The creeping plants are either allowed to trail on the ground, or are let up a bamboo to the roof of a house. The gourds are obtained all over the rainy season, the plants dying off with the cessation of the rains.

Cultivation of kadu.—The cultivation of *kadu* does not differ from that of *kaunhrá*. The seeds may be put in at any time during the rainy season. The fruits appear about three months after the seed is sown. They are available at all times from Bhádra up till the close of the next cold-weather.

14.—*Sim or* Indian bean (*Dolichos lablab*).

There are several varieties differing in size and colour, which may be white green or red. A small circle of ground is dug up with the spade, manured and evelled with the hand; a few beans are put into it in Ásár or Srávan. The creeper is let up a tree on the hedge, or up a bamboo stuck up near the plant. The fruits appear early in Áughrán, and are picked off while the seeds are still soft and green. A succession of green pods is obtained up to the month of Fálgun following. The green pods are eaten as a vegetable, and considered very wholesome; the ripe beans are eaten as pulse like *rahar*. A variety of English bean (*Fava*) is grown as a vegetable by the Koeries of Chutiá and Hátiá near Ránchi. The seeds are put in on the ridges of water-furrows in the same way as radish-seeds. The plants fruit in Mágh, and the green pods are sold in the Ránchi market, and eaten as a vegetable only by the European residents of the station. English beans are not yet in demand with the native population.

VI.—SPECIAL CROPS.

1.—*Sugarcane* (*Saccharatum officinarum*).

Extent of cultivation.—The cultivation of sugarcane is unknown on the central tableland of Chutiá Nágpur Proper, and is confined to the Five Parganás adjoining the district of Mánbhum. It is of recent growth, and said to be extending every year. The quantity of sugarcane grown in the Five Parganás is as yet too small to make the crop sufficiently important. It is at present grown only in those villages in which exceptional facilities for irrigation exist.

Varieties.—There are three varieties in cultivation, viz., (1) the *bánsá*, (2) the *punrí*, and (3) the *kájali*. The *bánsá* is a thin white cane, less juicy than the *punrí*, and hard to press. The *punrí* is a little thicker, but shorter, containing a larger proportion of juice and softer in texture. The third variety is so called from the purple colour of the cane; it is never grown by itself, but crops up here and there among the first two varieties. The *bánsá* yields a *gur* of a nicer colour than the *punrí*, but having a bad smell. In Támár, the *punrí* is grown in preference to the *bánsá*, which is, however, more largely cultivated in other parts of the Five Parganás.

Rotation.—In the Five Parganás, sugarcane is usually grown for three successive seasons on the same land. After three years, some inferior crops like gorá, sarguzá, &c., are taken for a year with a view to enable the soil to recoup its lost fertility. Occasionally sugarcane is grown every other year, alternating with wheat, tobacco, upland or lowland paddy, according to the position of the land, &c.

Soil.—Sugarcane is grown on any land which is within easy access of water for irrigation. It is usually grown on *bári* lands provided with wells, and on the banks of *bánds* and rivers. Alluvial soils on river banks are preferred to all the rest. Such soils are usually loamy in character and yield a heavy growth of canes. Besides the convenience of irrigation is a strong recommendation for choosing these soils for growing sugarcane. *Nágrá* (*chite*) or

heavy clay soils are also sought for sugarcane ; the *gur* made from canes grown on clay soils is said to be whiter and contains a larger proportion of crystallized sugar than that from any other cane. *Nágra* soils are, however, rarely found on uplands ; the quantity of such soils available for sugarcane is therefore very limited.

Manuring.—Cowdung, ashes and mud from old tanks are the manures used for sugarcane land. Raw cowdung is avoided, as it encourages the attacks of white-ants, which occasionally do considerable damage to young shoots. Alluvial or *pánkuá* soil is seldom manured, being too rich to require artificial help.

Rent of sugarcane land.—As a rule, sugarcane land, although forming part of the ráyat's holding, is separately paid for at a much higher rate than is paid for upland The rate of rent varies from 4 annas to Re. 1 per *káhan* of cuttings planted. One *káhan* of cuttings is calculated to occupy about one-third of a *kát* that is, about two-thirds of a bigha.

Cultivation.—The land is first ploughed up in Mágh. If there has been no rain, it is irrigated before being broken up. Before the time of planting the cuttings, the land is ploughed five or six times in all, the larger clods broken by the *dhelphuwá* and the soil harrowed and levelled by the *mher* or harrow. Before the last ploughing, cowdung and ashes are applied to the field ; these get mixed up with the soil by the ploughing which follows. Pond-mud, if used, is spread over the land before it is broken up in Mágh. When the ground is levelled and reduced to dust, it is dressed into ridges and forrows about 10 inches apart from one another. The cuttings are then laid down lengthwise along the hollows at intervals of about nine inches from end to end, and then lightly covered over with loose soil. A watering is given after the planting has been completed on the same day. The planting season extends all through the months of Fálgun and Cheyt; the earlier it is done, the better for the crop. Irrigation is repeated every three or four days in the beginning; the interval gradually increases up to seven to ten days according to the dryness of the weather.

When the plants have become about a foot high, the ridges are hoed up with the *khurpi*, and the furrows slightly filled in. In Ásár, after the rains have set in, the land is levelled up with a view to facilitate the drainage. In this respect the practice is just the opposite of what is followed in the Bengal districts, where the land is drawn up into ridges and furrows at the approach of the rains, in order to prevent the stagnation of water in any part of the field. This difference of practice arises from the fact that Chutiá Nágpur Proper being an undulating country, the drainage is perfect at all times: in fact ridges, if allowed to remain, may stand in the way of free egress of water from the fields ; while in the perfectly flat country of Bengal the only means of letting the surface water escape from a field lies in the running up of parallel water furrows across its face. During Srávan and Bhádra, one or two more hoeings are given to the field. About the end of Bhádra, when the plants have become six to eight feet high, short bamboo posts are stuck up at suitable intervals in the field. To these four or more canes are tied up with the leaves with a view to prevent their being blown down by high winds. Before so tying up the canes, they are wrapped up with their own leaves—a practice which is not so much insisted upon in the Five Párganás as is done in Burdwan, Hooghly and many other districts of Bengal.

Harvesting.—The sugarcane harvest begins as early as the last half of Pous, and lasts up to the beginning of Cheyt. The canes when ripe are simply cut at the base with the spade ; the leaves stripped off and taken to the furnace for use as fuel. The tops of the canes are cut off and kept apart to supply the cuttings wanted for the next year's crop.

Pressing.—Sugarcane is pressed in the Five Parganás by any of the following four kinds of machines :—(1) The *kalhu* or mortar and pestle—the same as is used by the Telís in pressing oilseeds ; (2) the *ráksi*, with two small horizontal rollers turning one over another ; (3) the *choke ghání*, with two vertical wooden rollers turning one against another by means of a screw arrangement ; this machine appears to me to be the prototype of the Beheea mill ; and (4) the Beheea mill. The use of the latter is as yet very limited, but is extending every year, and will no doubt in a few more years drive the old-fashioned native mills out of use. The *choke ghání* is in general use, and preferred to the

first two native mills. The canes have to be passed twice through it to ensure thorough pressing.

Boiling of the juice to gur.—The furnace is made on some convenient piece of land near the ráyat's homestead. Its construction does not differ from that in Bengal. The top of the furnace contains four or more holes to accommodate the *báhánis* or boiling pans. These are oval shaped earthen vessels of various sizes. A common-sized pan was found to measure 26 inches across and 15 inches deep. The pans hold from 30 to 50 seers of juice. During boiling, the scum that comes up to the surface is skimmed off at frequent intervals with a *jhánjrí* or perforated iron strainer. Beyond the removal of the scum, nothing else is done to purify the juice. A bamboo *birní* or brush is placed in the liquid to prevent it overflowing.

Gur is the only product of sugarcane made in the Five Parganás. About five or six seers of cane-juice are calculated to yield one seer of *gur*. The actual proportion is variable. The juice of *bánsá* canes grown on *nágrá* soil is rich and yields as much as 25 per cent. of *gur*; while that of *punrí* canes grown on alluvial soil is poor in quality and will not often yield more than half the amount the former gives.

One *káhan* of sugarcane land will yield at the best five maunds of *gur*. Taking the *káhan* as equivalent to two-thirds of a bigha, the produce will be at the outside about seven or eight maunds per bigha, valued at about Rs. 30.

Diseases.—The only two pests to which sugarcane is subject are—(1) *Nalipoká* (*Diatræa Saccharalis*), a species of caterpillar, eating into the soft growing part of the cane in early life. It is known as *dholsunrá* in Burdwan. (2) *Diyá* or white-ants; these cause considerable damage to the crop by eating away the cuttings and also infesting the young stems and eating into their pith. They are shaken off the canes when discovered.

Suggestions for improvement.—The use of the Beheca mill is on the increase; but the use of the large shallow evaporating basin is as yet unknown. The quality of *gur* turned out at present appears to me very inferior. There is much room for improvement in the direction of *gur* manufacture. As regards the cultivation of the canes, the manuring seems to me inadequate to a full yield of canes. Oilcake, as a manure for sugarcane and potatoes, is as yet unknown and may be usefully introduced. The *Bombay*, *Samsera* and other improved varieties may be tried, and unless they have been actually experimented with, it is difficult to pronounce upon their success or otherwise.

2.—*Tobacco* (*Solanum nicotiana*).

Extent of cultivation.—The cultivation of tobacco is almost entirely confined to the Five Parganás On the plateau of Chutiá Nágpur, it is cultivated in very small patches by ráyats for their own consumption. The area of the tobacco-growing land in the Five Parganás was estimated by Mr. Peppé at from 500 to 600 bighas (page 343, Statistical Account of Bengal, volume XVI). The cultivation of tobacco, which Mr. Peppé reported to be in process of supercession by poppy, has lately revived, and is said to be actually on the increase.

Varieties.—There is only one variety (*disí*) in cultivation in the Five Parganás. It has large lanceolate leaves, very much like those of the country tobacco of Bengal. A smaller variety, called the *hingulíá* is said to be cultivated to a small extent, but it did not come under my notice in any of the villages I visited.

Methods of cultivation.—There are two methods of cultivating tobacco—(1) the seed is sown in a seed-bed in Sráván, the seedlings transplanted in a garden plot (*bári*) in Bhádro, and the crop harvested in Áughrán; (2) the seed is sown, in a seed-bed in Bhádro and Áswin, the seedlings transplanted on alluvial lands on river banks, or on any upland capable of irrigation from a stream or reservoir. The crop is harvested in Fálgun and Cheyt. The first method requires little or no irrigation; the second method is wholly dependent on it In ordinary parlance tobacco grown on *bári* land according to the first method is usually spoken of as *bári* tobacco; that grown on alluvial lands under irrigation as *berá* tobacco, the term *berá* signifying soil formed by deposit of silt from a river. Excepting in respect of the time of sowing, planting, and

harvesting, and of irrigation, there is no difference between the above two methods of growing tobacco.

Soils.—Loamy soils, especially those of alluvial origin, are best suited to tobacco. Sandy soils dry up too quickly and are unsuitable to tobacco, as indeed they are to all crops requiring irrigation.

Manuring.—Tobacco land is manured in the Five Parganás with cowdung, ashes and occasionally the refuse of sugarcane. Alluvial soils do not usually require to be manured.

Seed-bed.—The seed bed or nursery is made on a piece of garden-land (*bári.*) It is dug up with the spade, manured, and levelled with the hand. On this the seed is sown broadcast in Srávan, Bhádra or Áswin, according as the crop is to be raised on *bári* or *berá* land. When the seedlings are about three inches high, they are taken up for transplanting.

Cultivation of tobacco land.—The land intended to be transplanted with tobacco seedlings is ploughed two or three times and harrowed once. *Bári* land receives several more ploughings, and is well pulverized by the *mher* before the seedlings are put in. *Berá* land being rich, fresh and moist, is not so carefully cultivated. The manure is applied, if necessary, between any two ploughings, and gets mixed up with the soil by the subsequent ploughings. When the land has been pulverized and levelled, small circles of ground at intervals of about a cubit are prepared, and some well-rotten manure is put into each. In these the seedlings are then transplanted. They are carefully watered for the first few days from a vessel. After they have struck root, they do not require to be watered at all, if grown on *bári* land ; on *berá* land, they have to be watered every three or four days Where water is plentiful, the *berá* land is subsequently drawn up into ridges and furrows, and irrigated in the same way as potato-land. With a view to protect the young plants, before they are in full growth, from the sun, and to prevent quick evaporation from the watered ground, the plants are kept covered up during the day with straw, leaves, &c.

After the plants have struck root, the intervals are carefully hoed and weeded several times. When about a foot high, the tops of the plants are nipped off to make them more bushy; small side leaves are also taken off with the same view, leaving only eight or ten leaves to grow, which thus increase in size and strength.

Harvesting.—The *bári* tobacco is harvested in Áughrán, and the *berá* in Fálgun and Cheyt. The plants are cut down by the sickle, leaving about a couple of inches of stem in the ground. These yield a fresh crop of leaves in about six weeks more, but the second crop is much smaller in quantity, and the leaves want size and strength.

Curing.—The method of curing tobacco followed in the Five Parganás is much the same as in many parts of Bengal. When the plant is cut down, it is collected in the field, and spread out to dry for two days, the leaves being turned over to ensure uniform withering. On the following day, the stems are divided lengthwise into two equal halves, each containing four or five leaves. They are then collected into small bundles and carried to the ráyat's house, where they are put into small heaps about a foot or a foot and a half deep, pressed down by stone slabs placed over the heaps, and thus allowed to ferment. The heaps are broken up every evening, and the leaves spread out to cool, being usually strung on ropes hung up in the house. This process of alternate fermentation and cooling is continued for nearly a week, when the leaves are considered to be cured and stored for disposal.

Produce.—The yield of *berá* tobacco is heavier than that of the *bári.* The former average about 12 maunds of dried leaves per bigha, valued at Rs. 4 to Rs 5 per maund. The latter will yield on the average about eight maunds of dry leaf per bigha. The produce of the second crop is usually about a third of the first crop.

The country tobacco of the Five Parganás is not fit to be smoked in a *hookáh;* it is made up into small cheroots (*phikás*), which are rolled up in sál leaves and liberally smoked by the people of the Five Parganás. Most of the tobacco consumed in Chutiá Nágpur, and even in those parts where tobacco is grown, comes from Behar, and is known as the Tirhut tobacco.

Pests.—In early life. the young leaves are often eaten away by a kind of grub.

3.—Betel *or pán* (*Piper betel*).

The cultivation of betel forms the profession of a special caste of Hindus—the Pánerís. In Chutiá Nágpur Proper, there are only two villages, Pithauriá and Thákurgáon, to the north of Ránchí, where betel is cultivated. A large portion of the pán leaves consumed in the country comes from Deo in Gayá. The use of betel is confined only to the zemindars, mahájans, and other well-to-do classes of people.

Betel leaves are grown in small plantations called *barozes*. To make a new *baroz*, it must be first fenced in with a high paling of bamboos, about seven feet high, and roofed with a light framework of bamboo-twigs and thatch, in very much the same way as a fern-house. The roof is supported on slender bamboo stems. When the fence is completed, the land inside is dug up with the spade, pulverized into a fine condition with the *dhelphurá*, and dressed into ridges and furrows; the ridges are 18 inches wide, with furrows nine inches wide intervening between them. In the period from Cheyt to Ásár, betel cuttings are planted along the ridges at intervals of three to six inches; the earlier they are planted, the better for them. The young plants are irrigated from a vessel up to the time the rains set in. The irrigation of old plantations is carried on by leading the water along the furrows between the ridges.

In old plantations, the waterings begin in Cheyt and are continued until the rains set in in Ásár. During the rains, each individual plant is manured with a compost made of rotten meal of various grains—wheat, barley, gram and lentils—mixed with oilcakes. The compost is applied at the rate of one to two handfuls for each plant. New earth is also brought and spread over the ridges round the roots of the creepers. *Khirsi* soil is preferred for this purpose to all others. After the rains are over, irrigation is resumed and continued till the end of Áughrán, when the last crop of leaves is gathered in.

The betel vines are let up the bamboo twigs and allowed to spread on the inside of the roofing. The leaves are picked up from time to time. The first picking takes place in Cheyt, a few days after irrigation has commenced. The heaviest yield is obtained during the rains, when the plants are in the height of their growth. The leaves picked off from Cheyt till Áughrán are sold off. The last gathering in Áughrán is stored in baskets for sale during Paus, Mágh, Fálgun and Cheyt, that is, so long as the new crop does not come in. The leaves are at first sorted into different qualities, and then placed layer over layer in baskets and covered up with a moist cloth. Every day the leaves are examined, and those showing the least signs of rotting taken off and sold. In this way, betel leaves will keep good for nearly six months.

A betel plantation does not last for more than four or five years, after which the soil gets apparently exhausted, the leaves of old creepers get fewer and smaller in size. *Barozes* are made in lowlands, which are artificially raised with earth obtained by digging trenches round them. Perfect drainage is ensured by levelling the ground and drawing up ridges and furrows on its face. The water for irrigation is obtained from temporary wells dug for the purpose outside the plantation.

Diseases.—The following pests injure the betel crop:—

(1) *Chápká* or leaf rot, probably a fungoid disease which causes the leaves in store to rot away. It is very contagious. To guard against it, the stored leaves have to be examined every day, and the rotting ones are taken away.

(2) *Diyá* or white-ants. These do considerable damage by eating away the bark of the vines. Whenever discovered, they are shaken away and trodden to death.

(3) *Bhuá.*—A fungoid disease which causes the roots to die away. No remedy is known.

Produce and cost.—The Páneris say that taking every item of labour and expense into consideration, a plantation about one acre in extent will cost Rs. 200 for its making. When completed, five or six men will have to be constantly at work in the plantation. The annual yield of such a plantation is said to average Rs. 400.

SECTION 7.—*Fodder supply.*

It is needless to say that the ráyats of Chutiá Nágpur, like their brethren of many other parts of India, never grow any crop for the special purpose of feeding their cattle. The absence of fodder crops is one of the distinctive features of Indian husbandry. This cannot be entirely ascribed to the ráyat's want of appreciation of the value of fodder crops. I have found many ráyats, even in this backward district, who frankly admitted that the breeds of cattle and buffaloes might be greatly improved if they could be liberally fed, and many zemindars actually feed their horses on such valuable green crops as gram, barley and lentils. The absence of fodder crops from Indian husbandry should be, I believe, largely ascribed to economic conditions over which the ráyats have no control. In former days, when cultivation was limited and larger area for pasturage was available either in the shape of forest or of fallow land, when population was smaller, its wants fewer, and commodities cheaper, in fact in that state of society when the people lived in a very rude state of plenty, the cattle roamed at pleasure on the village waste and did not suffer from any apparent insufficiency of food. The economic conditions have, however, changed in recent times. Population has been fast increasing, and with it the area of cultivation. This has brought about a steady diminution of the area of pasturage, and the consequent necessity of supplementing pasturage by fodder and oilcakes. Where this growing necessity has not been adequately met, the breeds have sensibly degenerated, as they have undoubtedly done more or less all over Bengal, and particularly in Chutiá Nágpur. The area of cultivation, although it has been steadily increasing, has with difficulty kept pace with the increasing population, and has always been just enough to produce the immediate requirements of the people. Under these circumstances, the people have been confronted by the economic problem whether they should set apart a certain proportion of the cultivated area for the special requirements of their cattle, and thus stint themselves of their own personal necessaries, or they should keep them just strong enough to do the field work, which is necessarily of a light character, and appropriate the entire area of cultivation for the supply of human wants. The problem has been everywhere replied in favour of man and against his cattle. If a certain area of cultivation be set apart for fodder crops, the cattle of the country will undoubtedly improve, the oxen will give greater work in the field, and the cows milk more heavily; but it is extremely questionable whether the profit resulting from such increase is sufficient to compensate for the loss of income occasioned by the growth of fodder crops. This furnishes a problem which cannot at this moment be satisfactorily answered until it has been tested in practice.

There is another fact which appears to stand in the way of ráyats taking to the use of specially raised fodder crops for their cattle. In countries where cattle are reared for meat, the cultivator can afford to raise fodder crops, as by feeding his cattle on them, he can get an immediate profit in the shape of meat. In India, however, the consumption of animal food is extremely limited, and even those classes who eat beef and mutton do not look to them as staple articles of food. In Calcutta a considerable amount of beef is consumed by Europeans and others, and accordingly we find that the metropolitan dairymen (who are the only Hindus who will ever consent to feed cows for slaughter) feed them on costly bought food. Had the consumption of meat been general all over the country, the ráyats would have long since awakened to the necessity of growing fodder for cattle intended for the butcher, and as one class of animals cannot be improved without a corresponding improvement of the others, the whole breed of cattle would have been kept in a good condition, and prevented from lapsing into the degeneracy which most of the Indian breeds now present.

The only fodder which the ráyat is in the habit of storing for use is paddy straw. I have shown in the section on live-stock that the produce of straw is notoriously insufficient, so much so that in the dry months (Mágh to Jeyt) when the dependence of cattle on straw is greatest, they are literally reduced to skeletons.

Besides paddy straw, the following are used for feeding cattle: straw of *gondli* (*Panicum miliare*) and other millets, of the leguminous pulses (*urid*, *kurthi*, *tarai*, &c.), and of wheat and barley. The total quantity of straw of these

crops is, however, very small, and in consequence such straw is never stored for future use, but is fed off within a few days after the crops have been threshed.

The process of storing green fodder in pits or silos have never been, so far as I am aware, tried in this district. Some experiments in this direction may be tried with advantage so long as the ráyats will not take to growing fodder crops: wild grasses which come up abundantly during the rainy months will present themselves as the only and most convenient fodder for storage in silos. Maize, sorghum, and various leguminous crops admit of being ensiled, but their general adoption seems far from probable for reasons given above.

SECTION 8.—*Fuel supply.*

There are no fuel reserves in the sub-division belonging either to Government or to private individuals. In the jungly parts of the country, fuel is abundant and cheap, but in those parts where the forest has been cleared away, especially in the country around Ránchí, fuel is becoming dearer every year. Firewood is much dearer at Ránchí than in any other part of the Chutiá Nágpur Division, although it is yet cheaper than in most districts of Bengal. The following statement shows the prices of fuel in different districts (*Calcutta Gazette* of 10th July):—

Ránchí	...	160 seers per rupee.	Gayá	...	200 seers per rupee.
Házáribágh	...	320 „ „ „	Sháhábád	...	140 „ „ „
Mánbhum	...	200 „ „ „	Daccá	...	64 „ „ „
Cuttack	...	80 „ „ „	Chittagong	...	100 „ „ „
Pátna	...	130 „ „ „			

The comparative dearness of firewood at Ránchí arises from the jungles being inaccessible to carts and from communication being difficult, especially in the rainy season. The cost of carriage is therefore considerable; in fact, it is mainly this which decides the price of fuel in the market. To guard against the danger of fuel becoming scarce at Ránchí it was proposed a few years ago to convert a certain jungle, called the Paiká Dehát, belonging to a private estate under the management of Government, into a fuel reserve; but the proposal did not meet with the approval of Government and so fell through. With proper means of communication between Ránchí and the distant parts of the sub-division, there is no reason to fear any scarcity of fuel at Ránchí. The owners of forest usually levy a fee on the right of gathering fuel at the rate of 1 or 2 pice per man's load and 1 to 2 annas per *sagar* load. Annual arrangements are also entered into with ráyats, who on paying a certain fee to the proprietors are entitled to gather fuel and small wood in their forests. A jungle in which no one is allowed to cut wood or collect fuel without previously paying a fee for the right of doing so is called a *rákháwat* or protected jungle. The proprietor's sole motive in protecting a jungle is to turn out a certain income by the levy of fees, and not to preserve the trees till they attain maturity. Valuable trees such as *sál, sisu, kusum, máhuá,* and *ásan* are not allowed to be cut down in protected forests.

The question of fuel supply has an important bearing on the supply of manure. Where firewood is scarce and dear, ráyats are compelled to burn a large portion of the cow-dung in the shape of cakes (*gointas*). The danger of manure being wasted in this way need not be feared in Chutiá Nágpur proper. Cow-dung cakes are burnt to a certain extent as fuel, but the use of firewood is general. Every ráyat is entitled to collect fuel in the village forest; and it is the ráyats of those villages only in which there are no jungles at present, that depend largely on cow-dung as a substitute for firewood. The practice of burning cow-dung as fuel is no doubt injurious to a certain degree, as all the valuable nitrogenous ingredients are thereby lost. But considering that some of the crops, like máruá and paddy seedlings, potato and cotton, require to be manured with ashes, a certain quantity of cowdung must be burnt: if for fuel in the first instance, so much the better.

2. Among various trees which are artificially reared by the people, the chief place is occupied by the mango. Mango-topes form a most characteristic feature of the sub-division. There is not a village which does not possess one or more mango-topes. These are planted only by zemindars, who have an exclusive right to the wood; the fruits are, however, considered as common

property of the village. Besides mangoes, the following trees are usually found on village sites:—*karanj (Pongamia glabra)*, *koinhár (Bauhinia variegata)*, *karam (Nancha cordifolia)*, *máhuá (Bassia latifolia)*, jack *(Artocarpus integrifolia)*, *baer (Zizyphus jejuba)*, *bar (Ficus indica)*, and *pipar (F. religiosa)*.

3. Among the roads of the sub-division, the following have been planted out with trees. (1) Road from Ránchí to Lohárdággá, 43 miles; (2) road from Ránchí to Khuntí, 22 miles; (3) road from Ránchí to Chota Pálu, 22 miles; (4) Ránchí station roads. The following trees have been planted on the roads:—mangoes, jacks, *karanj (Pongamia glabra)*, *máhuá (Bassia latifolia)*, *karam (Nancha cordifolia)* and *tend (Melia azadarach)*, among indigenous trees; and rain-trees *(Pithecolobium album)*, a few mahogany and teak trees among the exotic.

SECTION 9.—*Live-stock.*

The live-stock of the sub-division may be classed under the following heads:—

1. Cattle including buffaloes.	4. Horses.
2. Goats.	5. Fowls, ducks and geese.
3. Sheep.	6. Pigs.

Each of these will be separately treated in this section.

1.—*Cattle.*

As everywhere else in India, cattle form the most important portion of the live-stock of this sub-division.

Number.—No statistics exist except those furnished by the Settlement Report of the Chutiá Nágpur Estate. This returns a total number of 35,316 head of oxen, exclusive of working buffaloes, distributed over 348 villages having an aggregate area of 684 miles, or in other words 51·6 head of cattle per square mile, and 101·5 head for each village. A better idea will be conveyed by saying that there are 212 head of cattle for every 100 cultivating families (the total number of such families in the area under question being 16,640). The number of working buffaloes cannot be accurately obtained, as they have been classed along with mules; but as the latter are seldom or never met with, the figures for mules and buffaloes may be taken as approximately correct for buffaloes. We thus get a total number of 7,499 head of working buffaloes for the area under report. This gives 21 head of buffaloes for every 100 head of oxen in the country (or, roughly, one of the former for five of the latter). While the total number of working animals is found to be proportionate to the area under cultivation, being in fact approximately double the number of ploughs in the country; the proportion of working buffaloes relating to oxen increasing with the extent of jungle in any locality on account of the facility which the jungle affords for the maintenance and breeding of buffaloes.

It is possible that cows, which are habitually yoked to ploughs by the Kols, have been also included among oxen. Such cows are spoken of as *gunris*.

The Chutiá Nágpur Settlement Report does not show the number or distribution of milking animals in the villages which came under settlement. In the central and open parts of the plateau, I have met with few ráyats who could afford to keep a milch cow or a she-buffalo, owing to the extreme scarcity of fodder, which is barely enough to feed the working animals. Such animals are consequently kept by the well-to-do classes of people—including the landed proprietors and tradesmen—who can afford to buy food for their cattle. *Gunris* or working cows are, however, found in large numbers in these parts, as indeed all over the sub-division, but such animals are rarely milked, or even, when milked, yield too little to deserve being called milch-cows.

Milking animals are, however, found in large numbers in outlying parts of the sub-division, as in the Southern and Western Parganás, in parts of the Five Parganás and in Torí. The jungles of these parts afford a cheap pasturage all round the year to the cattle of neighbouring villages; it may be said that the greater the amount of jungle in a certain tract of the country, the larger the number of cattle it can and does maintain. In the jungly tracts there are few ráyats who do not own a few head of cattle beyond those which are wanted for the ploughs, while I have found many who possessed 20 to 50 head and even more. With the people of these parts, cattle are looked upon as synonymous

with wealth, as indeed it has always been in every country where trade activity was yet dull, and where the rich could not find a better and more profitable investment than cattle. The economic condition of the country is, however, so rapidly changing, and its disafforestment is being so progressively effected, that in another half century the numerous and extensive herds of cattle which are now met with in the jungly tracts will have disappeared, leaving only those which are needed for the cultivation of the fields.

Breeds.—There is only one indigenous breed of cattle—the same as is found all over Bengal. Small as is the breed in size, it has further degenerated on the plateau of Chutiá Nágpur, owing no doubt to the insufficiency of food on which the cattle are fed. I doubt whether the average Nágpur cow will weigh half as much as any cow found in the central districts of Bengal. She is a poor milker, yielding, if she is the best of her breed and liberally fed, about two seers of milk per diem at the height of her flow.

The up-country breed of cows (locally known as *baghodí* cows) is met with in the town of Ránchí and in the houses of rich zemindars in the country. A few draught bullocks of the same breed are also kept by contractors and others in the town. The number of these cows and bullocks is, however, too small to deserve separate mention. *Bagodhí* cows are said to invariably degenerate in the second and succeeding generations in Chutiá Nágpur, even if kept and reared with the greatest possible care.

The buffaloes of the country are smaller in size than those of Eastern Bengal. As working animals, buffaloes are deemed much superior to bullocks. It is usual to calculate that if a pair of bullocks can plough about one bigha of land, a pair of buffaloes will do about half as much again. Besides, a buffalo plough will stir up the soil an inch or two deeper than a bullock plough.

Price.—A pair of bullocks sell ordinarily for Rs. 12 to Rs. 20, rarely up to Rs. 30. A single *gunri* or ploughing cow sells from 5 to 7 rupees. A pair of young buffaloes, young and not yet fit for the plough, sells from Rs. 16 to Rs. 20; a pair of working buffaloes from Rs. 20 to Rs. 40, rarely exceeding the latter.

A milch-cow yielding two seers of milk daily will fetch about Rs. 16; but as this quantity is not usually attained, a cow sells on the average for a lower figure. The price of a she-buffalo varies from Rs. 20 to Rs. 30, according as she yields from two seers to three seers of milk per diem.

The price of country cows and bullocks is, however, considerably much larger. Generally speaking, an up-country cow, which is calculated to yield five seers of milk per diem (although very often she yields much more), sells at Ránchí for Rs. 40 to Rs. 50; and a pair of bullocks will fetch from Rs. 80 to Rs. 150 according to their size and condition.

In respect of both the indigenous and the up-country breed of cows, it may be laid down that for every seer of milk the cow is calculated to yield at the height of her flow, she will fetch from Rs. 8 to 10. Such a rule for calculation is, however, observed in practice only in the cattle markets of Calcutta.

Food, its description and quality.—In respect of food, the working animals (bullocks, working buffaloes and *gunris*) and the milking animals should receive separate treatment, in the same way as they do in the hands of their owners. I speak first of the food of working animals.

Treatment of working animals.—Every ráyat has a *charohá* or cowherd to look after his working animals, which are as a rule separately pastured from the common herd of village cows. The *charohá* is either a lad of the household, or a paid servant of the cultivator. Working buffaloes are pastured along with oxen, but when the ráyat is well off and has got a large number of buffaloes, he keeps a second *charohá* to tend them. It is also the custom in many parts of the country to provide for the pasturage of oxen separately from cows for only those months in which work is heaviest, viz, from Bysákh to Áswin; during the rest of the year the oxen are made over to the *ahir* and pastured in common with the cows. To be pastured well, buffaloes should be kept apart from cattle, as they feed well in the morning and in the evening when it is cool, and refuse food when it gets hot. It is the duty of the *charohá* to take out the oxen at cockcrow to the neighbouring uplands and rice stubble; there they remain till about 8 o'clock in the morning, when the husbandman comes up with his plough, yokes his cattle, and keeps them ageing till midday,

often up to 1 or 2 P.M., according to the urgency of the time. The *charohá* then takes them out again for pasture on which they are kept till dark. They are then driven into the *gohál* or cowshed for the night. On entering the cowshed, the animals are tied by the neck to separate posts and are each given a handful of straw.

Such is the daily routine of work and feed of working animals. In the preceding section on Fodder-supply, I have related how scarce fodder has become in the central portion of the plateau on account of the total disappearance of forest from its face. Fallow and *tánr*, &c., the stubble of *gorá*, *máruá* and low land rice afford the only pasturage during the dry season from December till June. The quantity of fodder supplied by these is certainly small, and what little exists gets dried up and becomes hard, coarse and devoid of nutrition. During these months cattle are reduced to an extremely low condition. But after a few showers of rain in June and July, an abundant growth of grasses comes up, which fully compensates for the scarcity during the preceding months. From July to November fodder is abundant, and cattle which have been previously kept in a more or less starving condition soon regain their bulk.

Straw is given to working animals when the pastures get dried up, and is continued up till Srávan. During Ásár and Srávan cattle eagerly feeding on the fresh young grasses which then come up are apt to get diarrhœa and hoven, to prevent which straw is continued for a few weeks even after the young grass has become abundant. The quantity of straw given to a bullock varies from 1 to 2 seers per diem; a buffalo gets about double the quantity. The straw is given whole, being neither chopped nor flavored with oilcakes, &c, as is usually done by ráyats in Bengal.

The use of oilcakes, and in fact of any food other than grass and straw, for working animals is almost unknown in the country. In well-to-do households kitchen refuse and *már* (the liquid drained off boiled rice) are distributed among the cattle, but such delicacies are specially reserved for the family cows. The poverty of the mass of the people prevents them from making a liberal use of oils for cooking and annointing purposes; the production of oilcakes is therefore limited. The supply of oilcakes is small and irregular, nor do they form regular articles of commodity in the market.

Scanty as is the supply of green fodder during the dry months, its insufficiency is not made up by a liberal ration of straw. The quantity of straw produced in the country is not enough to give each head of working cattle more than 2lbs. per diem. This will be apparent from the following calculation:—A pair of bullocks can cultivate about 5 acres of rice land, and say 1 acre of *gora*. These six acres will yield at the highest estimate about 18 maunds of straw These 18 maunds, distributed over the eight months from Áughrán to Ásár, will give each of the bullocks $1\frac{1}{8}$ seer or $2\frac{1}{4}$lbs. per diem. The actual quantity is, however, less, as a small proportion is usually spared for the cows.

Treatment of cows and she-buffaloes.—I have said in a previous paragraph that in the more cultivated portions of the country few ráyats can afford to keep milch-cows; in these parts the *áhir* or village cowherd has disappeared from many villages with the disappearance of the forest. Here the custom is for the *áhir*, if there is any, or for a cowherd of the village specially engaged for the purpose, to pasture the village cows in a common herd all round the year for which he is remunerated by $\frac{1}{2}$ a kat of paddy for each cow and 1 kat for each she-buffalo, besides small perquisities at the cow festival in Áswin (*vide* village officials and wages). The cows are pastured from morning till evening, when they are driven to the houses of their respective owners. At night well-to-do people (indeed none but well-to-do people can afford to keep cows in the well-cultivated parts of the country) give their cows small quantities of unchopped straw, refuse of the kitchen, már, &c. It is only the wealthy people who feed their cows on oilcakes and grains, the use of which is mainly confined to Ránchí and to the houses of well-to-do zemindars and Bániyás in the country.

In the jungly parts of the country the *áhir* is a prominent personage; the number of milking cattle is large, there being few ráyats who do not own a few heads of cows and she-buffaloes. All these remain in charge of the

áhir from year's end to year's end, never entering the premises of their masters, and being herded at night in the open air. Here and there a ráyat having a large number of heads of cows may engage a *chárohá* for himself and thus economise the expenses of pasturage.

What I have said before regarding the condition of working animals applies equally to milch-cows and she-buffaloes. During the rains grasses become exceedingly plentiful, and animals which have fallen in condition owing to scarcity of food in the previous months begin to recover their bulk. At this time the herds are all grazed on the village uplands, and as the grasses gradually begin to dry up in the winter months, they are taken into the deeper parts of the forests and fed on dried grass and the leaves of various trees, the chief among which are *baer* (*Zizyphus jujuba*), *bar* (*Ficus indica*), *kussum* (*Sleicheria trijuga*, bamboo (*Bambusa stricta*), *pipar* (*Ficus religiosa*), *khayer* (*Acacia catechu*), and *ásan* (*Terminalia tomentosa*).

I have described in the preceding paragraphs the usual method of treatment of working and milking animals. From these it will be apparent that the only foods which the working animals get are pasture-grass and straw. The food of the milking animals consists solely of grass and the leaves of various trees and shrubs which they pick up in the jungles. I will now speak of the special foods—oilcakes and grain.

Oilcakes and grains.—The use of oilcakes for working animals is practically unknown. The same is true of the great bulk of milking animals, only the favourite among which, such as those kept in the stalls of the zemindars and mahájans receiving a daily ration of oilcakes varying from ½ to 1lb per diem per head. The supply of oilcakes in the country is extremely limited owing, no doubt, to the fact of the people using too little oil for culinary or annointing purposes. The people of Chutiá Nágpur do not entirely depend on *Telís* or professional oilmen for the supply of oil. In almost every village there are one or more oil-presses owned by ráyats, and worked by themselves and their neighbours whenever they want to get any oil pressed for their household consumption. The resulting oilcakes are not usually taken to the market, but given to working cattle. These are but occasional treats and do not in any sense form part of the regular feed of cattle. The following oilcakes are produced in the country:—Mustard cakes, *sarguzá* or niger oilcakes and *til* or gingelly cakes *Sarguzá* cake is the commonest, this oilseed being more largely produced in the country than any of the other two. The *price* of oilcakes varies from 3 to 4½ pies per pukka seer.

The use of grain is confined only to favourite cows like the up-country breed of cows kept by zemindars and other rich people of the country. The only grains used in this way are *urid* and occasionally rice.

Stall fed cows.—These are met with only in the houses of the zemindars and mahájans. A good many are also kept by the milkmen and many residents of Ránchí. Most of these cows belong to the up-country breed and are imported from the North-Western Provinces in the cold-weather months by professional cattle-dealers. The number of such cows is very small, and any detailed description of the feeding is unnecessary. The food of such cows consists of grass, unchopped straw, oilcakes, and some grain like *urid* or rice. The milkmen of Ránchí and well-to-do people living in the vicinity of outstills in the country are also in the habit of feeding their cows largely on the *máhuá* refuse of distilleries. Cattle are extremely fond of it on account of its natural sweet taste. It is also believed to encourage flow of milk, but as the milk retains the peculiarly disagreeable flavour of the *máhuá*, the latter is not in favour with those who want milk for their own use.

It is noteworthy that with the exception of the Police Circle of Silí adjoining Mánbhum, the practice of chopping straw as is usually done all over Bengal is altogether unknown in the country.

Dairy.—Ghee-making.—The following are the different products of the dairy:—milk, ghee or clarified butter and *máthá* or skim-milk. Cows are milked once in the morning, and buffaloes usually twice—morning and evening. Pure cow's ghee is of a yellowish colour and commands a somewhat higher price than buffalo's ghee, but as the former does not keep long, it does not admit of export by itself, and is therefore ultimately mixed up with buffalo's ghee, or locally disposed of.

The method of ghee-making followed in Chutiá Nágpur is exactly the same as in Bengal. The milk is, to begin with, boiled over a gentle fire; in the evening a quantity of old fermented skim-milk is added to the milk, which is converted thereby in the course of the night to curdled milk or *dahi*. In the morning the *dahi* is taken into a large earthen pot and churned by means of the churning stick. There are two kinds of churning sticks in use. The first is made of bamboo and is the same as is used all over Bengal. The second is made of a wooden handle with a thick circular dish of wood with fluted rim attached to its end.

Any detailed description of the mode of churning is unnecessary, as it differs in no way from the method in vogue in Bengal. I may urge here the extreme desirability of instituting special enquiries in the existing methods of butter and ghee-making followed by Indian dairymen, and of making an attempt to improve upon them if possible. Indian butter is decidely far inferior in quality to English butter in point of taste and flavour. Something ought to be done to ascertain the exact causes of their inferiorty, and when they are discovered, to introduce some methods of manufacture whereby the quality of butter may be improved. The inferiority of Indian butter is due in the first instance to the fact of the milk being boiled before curdling and thereby loosing its essential oils, and to its containing a larger proportion of water, and I believe of curd as well. An attempt may be made to introduce the method of making butter from cream. One great difficulty in the way is the heat of the Indian climate, which does not admit of milk being kept long enough for the cream to get up. In winter, however, I have found it possible in Calcutta to get sweet cream from milk and make butter of fair quality out of it. But the difficulty above referred to may be obviated by introducing cheap and small hand-power cream separators such as those now being widely advertised in British farming journals. If it can be shown that butter of good quality can be made from the cream obtained from those machines, I feel confident that they will come into general use, notwithstanding their costliness, in the same way as the Beheea sugar mill, which has driven the old-fashioned mills completly out of the country.

Butter, as it is, is rarely eaten by the people of the country. The only other product of the dairy besides ghee is *máthá*, or skin-milk, which remains in the churning pot after the butter has been skimmed off. *Máthá* is a favourite article of diet of the people, being considered cooling and therefore cherished in hot weather. A full earthen pot containing 4 or 5 seers of butter-milk can be had for a *pailá* or seer of dhan, otherwise for one pice.

Trade in Ghee.—The amount of ghee produced in the country is barely enough for the people. In Biru, Bárwe, and the outlying jungly parganás large herds of cows and she-buffaloes are met with. The surplus produce of these parts is exported to Ránchí and the central parganás where the local produce is not enough to satisfy the local demand. There is no export of ghee from the sub-division; on the other hand Ránchí merchants regularly import ghee from Palámau. At Ránchí ghee sells usually at one seer and a half for the rupee; in Biru I find it selling at three seers in the winter months; in the rainy season, when the buffaloes yield more plentifully and the demand is checked on account of the difficulty of communication, it sells there at four seers per rupee. Most of the *áhirs*, however, work under advances from mahájans and are called upon to deliver ghee to them at still cheaper rates.

Cattle-diseases.—It is only necessary to speak of cattle epidemics, and not of the numerous other diseases of the bovine race. Each of the prevailing cattle epidemics is treated in the following paragraphs:—

1. *Rinderpest.*—This most fatal epidemic is known all over India and is variously named. In Chutiá Nágpur it is distinguished into two distinct diseases, viz., *chherá* or purging, and *mátá* (or literally mother) by which name, the pustular form of rinderpest is designated. The name of 'mother' is given to the disease as the people take it to be the manifestation of a goddess whom they variously call Sitalá, Basanta, &c. Both *chherá* and *mátá* have been proved to be but different manifestations of the same disease, rinderpest, which is characterised by excessive purging, often accompanied by appearance of *pustules* or *guntis* on the skin and the mucus membrane of the mouth and the tongue. I found rinderpest prevailing in the South-western parganás of Biru and Pálkot at the time of my visit in December 1888. The usual time of

its appearance is, however, at the approach of the hot weather. Sporadic cases of rinderpest are, however, found all over the year. In Biru the epidemic must have been very widespread last year, as, besides cattle and buffaloes, a large number of wild deer died of it in the jungles. In this connection I may state an instance which will show that the people are sensible enough to understand that the epidemic spreads over the country not simply because some god wishes it, but the contagion is always conveyed through some tangible medium. Some people of a village in Biru found the dead body of a deer lying near a pool of water, and thinking it a nice treat, brought it to the village and shared the meat among them. The village had been hitherto free from the epidemic. The people who brought the carcase were not aware of the nature of the disease, or even if they were, they thought it would not do them any harm; but since then, however, they have had a rough awakening by the cattle dying away in numbers from the time the carcase of the deer was brought into the village.

Frequency of rinderpest.—People are unanimous in saying that rinderpest (which is the only cattle-epidemic they are afraid of) has become exceedingly frequent in late years. In former times cattle-epidemics used to come and go at intervals of a score of years, but in recent times they occur as a rule every four or five years. They can assign no cause of this frequency; but some say that because *mátá* or the mother Sitalá is not properly worshipped now-a-days, she is angry and wreaks her vengance by frequent visits. Whether we can assign any definite cause or not, it is certainly beyond cavil that rinderpest has become more frequent in Chutiá Nágpur, as I believe all over India, in recent times than it used to be in days of old. The facility of the disease spreading over the courtry is mainly due, I believe, to increased communication between distant places, and to this has been rightly ascribed the frequency of epidemics in these days. Half a century ago there must have been very little traffic between Chutiá Nágpur and the neighbouring districts. Now there are cart and pack-bullocks coming from distant districts as far as Gayá and Sháhabád in the north and Bánkurá and Ránigunge in the east. These serve as excellent media for the contagion which they may bring from their native districts or from the country through which they pass.

It is to cattle-epidemcis that the people universally ascribe the gradual dwindling of their herds, which at one time were large, but are being cut down by successive attacks of the epidemic. The frequency of rinderpest and the gradual disappearance of forest will eventually demolish the herds of the country, leaving barely those required for the immediate wants of cultivation. Such has already been the case in many parts of the country.

Symptoms of rinderpest.—Rinderpest is characterised by excessive purging, which may or may not be accompanied by the appearance of pustular spots over the body and on the tongue, &c. The animal has more or less fever and refuses food. It dies in one to three days. Some, however, escape. These are the symptoms taken account of by the people.

Treatment.—Rinderpest is not usually treated, and the animal left to take its chance. Quacks are, however, found in many villages, who profess to cure rinderpest. The following is the method of treatment followed by a cattle-doctor, who was pleased enough to communicate to me the secrets of his craft. In the early stages, when diarrhœa has set in, some astringents are administered, *e.g.* sap of the roots of *kend* (*Diospyros melanoxylon*) and of *doombar* (*Ficus glomorata*); cool emulsion of ripe *bel*, or if unripe, after the fruit has been well-boiled; young leaves of *phutkal* (*Ficus anfectoria.*) About an 8oz. dose of any of the above is given two or three times a day. In the later stages, treatment is not effective and hence unnecessary. The animal should be fed on delicate *dub* grass and young leaves. Boiled *urid* with salt should be also given. The animal must not be suffered to drink too much.

Seggregation.—The ráyats understand the principle of seggregation in the abstract, although they cannot act fully to the necessary extent. The affected animal is always kept apart, and its refuse is thrown away, rarely burnt down. When a village is found affected, the people of the neighbourhood take care that their own cattle do not stray into it, nor do they allow cattle of the affected village to come to their own. This is the rule, but how far it is acted upon in practice is doubtful.

The above precautions are taken only in cases of rinderpest and foot-and-mouth disease.

2. *Foot-and-mouth disease.*—This is likewise distinguished into two diseases—*khurá* or hoof disease, and *chápká* or mouth disease. The two, however, often occur together and are then spoken of as *khurá-chápká*. When the two are associated the mouth is first affected, and then the feet. The disease is not half so fatal as rinderpest; deaths occur only in those cases in which the animal is severely affected in the mouth and can neither eat nor drink.

Treatment.—The feet, if affected, are dressed with some bitter substance with a view to prevent flies from laying eggs and thus giving rise to maggots. To this end oil expressed from *jhingí* (*Luffa acutangula*) and powdered leaves of *sariphá* (*Anona squamosa*) are applied to the affected parts. When the mouth is affected, a mixture of equal parts of *ol* (*Amorphophallas companulatus*), soot, and tamarind, well mixed up, is rubbed over the tongue. This is applied every morning and causes profuse salivation from the mouth.

Sheep, Goats, Pigs, Fowls.

Sheep, goats, pigs, fowls, &c., form altogether a very small and, from an agricultural point of view, an unimportant portion of the live-stock of Chutiá Nágpur. Only a brief notice of each of them is given below:—

Sheep.—Although there is plenty of jungle pasture, very few sheep are met with in Chutiá Nágpur. In the neighbouring country of Palámau and Házáribágh, large flocks of sheep are found; their rearing and tending form the business of a pastoral caste called the *Gáreris*. In Chutiá Nágpur there are few *Gáreris*, and the few sheep that are found are never tended in flocks, but pastured along with goats and village cattle. They are exclusively reared for meat; their wool is of little or no consideration. In the neighbourhood of Ránchi and a few other places where the *Gáreris* have settled, they are regularly shorn thrice a year, viz. in Ásár, Kártic and Fálgun at intervals of four months, the *Gáreris* paying for the wool while still on the animal at 1 pice per fleece. All this wool is woven up at Ránchi into coarse blankets, which sell from 12 annas to Re. 1-4 per piece. In the interior of the country sheep are seldom or never shorn, the wool falling off naturally at the approach of hot weather. A low caste of Brahmins, the Dorihárá Gosáins, who are by profession *gurus* or spiritual guides of Kols and semi-aboriginal Hindus, sometimes shear a few sheep belonging to their *clientélle* and make up the wool into very coarse country blankets.

The Chutiá Nágpur sheep are altogether a very inferior breed, of a prevailing black colour, seldom white, with none of the points of a good improved breed. These, like the sheep of Palámau and Házáribágh, are distinguished from the prevailing breed of Behar by many broad characters; the former are black, occasionally mottled, with shorter wool of a coarse harsh texture, showing large proportion of kemp or hair intermixed with the wool, and altogether smaller in size than the Behar breed, which is of a prevailing white. The former breed is accustomed to graze in hilly jungles, and has therefore acquired a hardiness of constitution peculiar to all hillsheep.

A detailed description of sheep-rearing in Lohárdagá will be given under Palámau, where it is a much more important industry with a certain class of people (the *Gáreris*) than in the Chutiá Nágpur sub-division.

Sheep and goats are entirely kept on pasture grass, which at one time of the year becomes abundant, and at another sadly scarce. Besides grass, they also feed on the leaves of many herbs and trees among which should be mentioned *chakonr* (*Cassia*), *baer* (*Zizyphus jujuba*), *katai* (*Flacourtia sapida*), *nil* (*Indigo fera tinctoria*), bamboo (*Bambusa stricta*), &c. Once a fortnight an allowance of about half a chittak of *kharia nimuk* is given to each head of sheep, this being considered essential to good health, and looked upon as a preventive against epidemics.

A wether or castrated sheep one year old sells for Rs. 1-8; a two-year old will sell for Rs. 2 to Rs. 2-8.

Goats.—Goats are still less numerous than sheep in Chutiá Nágpur. The breed is the same as is found all over Bengal. Like sheep they are usually pastured along with village cattle, and receive no artificial food in the shape of oilcakes or grain. A yearling goat sells for Re. 1 to Re. 1-4. A castrated goat (*khási*) two to three years old may sell from Rs. 3 to Rs. 5.

Pigs.—Pigs are looked upon as abominations by most Hindus and all Mahomedans; they are kept and bred only by the Kols and semi-hinduised aboriginal castes, *e.g.*, the Gorsits, the Ghásis, the Lohárs, &c. Most ráyats of these castes have each a pig or two which he rears on his own account, there being no special caste, as in the district of Bengal, with whom the rearing of pigs forms the sole means of livelihood.

A separate shed, which is very often a lean-to to the ráyats' own cottage, is provided for pigs which are kept confined by night and let loose in the morning to graze in the neighbouring fields and pick up what little food they can. Every morning and evening *koonrá* or rice cleanings, *már* and water are put into a long wooden vessel (*dongá*) from which the pigs, young and old, feed. It is needless to say anything regarding the dirty fare on which pigs usually live. In the dry months of the year there is little or no green fodder available for any kind of live-stock, so that scarcity of food is a common suffering with all kinds of farm animals. I may point out here that this periodical scarcity of food has a most palpable effect on the breeding powers of animals. Thus in Chutiá Nágpur sows will not farrow more than once a year; ewes seldom or never give more than one lamb at a time, and cows rarely take the bull once a year as they do under good feed. In England, where live-stock is better cared for and fed, sows give as a rule two litters in a year, while many have been known to farrow 5 times in two years English cows as often throw twins as not, while there are always a few mothers in every flock who have been known to throw triples. With English cows, as also with the up-country breed of cows in Bengal, which are much better fed than the native diminutive cows, annual covering is the rule, while it is the exception with the latter.

A two-year old porker sells from Rs. 2 to Rs. 2-8. The males are castrated when two months old; one or two are kept for breeding purposes, and after they have done their work they are castrated when about six or eight months old.

Improvement of Live-stock.—The improvement of our live-stock, and in particular of cattle, is an agricultural problem of great importance. At the same time that we are trying to raise the productive powers of the soil, we should make unremitting efforts to raise the productive powers of our animals as well. Many simple plans will naturally suggest themselves; but in my mind it appears that the solution of the problem is encompassed with economic difficulties which cannot be removed without a radical change in the native practice of agriculture, and this change cannot be looked for without a corresponding change in the economic condition of the country. There can be little doubt that the degeneracy of Bengal cattle is mainly, if not wholly, due to the habitual want of sufficient food and care, to which the breed has been accustomed for many hundreds of years. Diminutive as the breed is, it is well known that with good feed, irrespective of careful breeding, the breed soon regains much of what must have been its original bulk, strength and milking powers; and although the experiment has never received a systematic trial, there is little doubt that, if well fed and cared for during three or four successive generations, the breed will have more than doubled its bulk, while its working and milking capabilities will have as largely increased.

The people of the country are habitually taunted for their utter apathy in regard to the selection of bulls and cows for breeding purposes. This melancholy disregard of a principle so scrupulously adhered to by all English breeders undoubtedly tends to degenerate the breed to a still lower pitch, but it would be idle to assume that this alone being in the main responsible for the inferiority of the breed, the mere importation of good blood accompanied by careful selection is alone sufficient to bring about the desired improvement.

I have said in the section on fodder supply how the degeneracy of Indian live-stock is the direct sequence of insufficient feed, and of the absence of fodder crops from Indian cultivation, and how the present economic condition of the country prevents any land being exclusively devoted to fodder growth. The cultivation of fodder for the sake of cattle cannot be made sufficiently profitable for a long time to come; till then no general improvement of the breed as a whole can be looked for.

Yet, I believe, there is considerable field for work in the line of cattle improvement on a small scale. The Agricultural Department has imported several English bulls and Merino rams with a view to import good blood into

the native breeds of cattle and sheep; the results of crossing thus brought about are not yet published, but so far as they are known, they are far from being encouraging. There may be truth in what Mr. Wallace has said in his India in 1887 regarding the unsuitability of white skinned English cattle to cross with our black skinned breeds; and even if the case be otherwise, the importation of foreign blood is not dictated by the principles of sound breeding. In Europe, cattle are now reared either for milk or for meat, and seldom for strength, which is the chief point looked to by the people of India. English cattle when brought to India are known to be very delicate, and almost valueless for draught purposes; and although they may produce valuable milking animals by crossing with the Indian cattle, as instanced in the case of the cross-bred herd of cows established by Mr. Taylor in Patna, their progeny prove almost valueless as draught animals. If we are ever to get a successful cross, we should look to such fine breeds of Indian cattle as those bred on the Hissar Stud Farm. These have already been greatly improved by careful breeding, and as they do not materially differ from Bengal cattle except in respect of size and a few minor particulars, the cross between a Hissar bull and a Bengal cow is likely to be a finer animal; and by successive crossing and selection, a fine cross-breed of cattle may be obtained in the course of a generation or two.

All this remains yet to be tested in practice. So far as experience goes, the crossing of Bengal cows with up-country bulls has proved a failure and is far from being popular. But I believe that in all such cases of crossing, little or no attention has ever been paid to the suitability of the bulls to cross with the particular cows, and to the proper rearing of the calves resulting from such crossing. Experiments in crossing Bengal cattle with up-country bulls may be usefully instituted in one or other of the Experimental Farms in charge of the Government.

Apart from crossing as a means of imparting bulk and strength to the diminutive cattle of Bengal, much can be done by a continued process of selection and eradication. To this end it is only necessary to take a few of the best animals of the indigenous breeds, cross them with each other, from their issue take the finest specimens and cross them again, and so on for a few generations in succession till all the fine qualities of the breed have been strengthened and perpetuated by repeated reproduction, and the defects have disappeared through repeated omission.

I have already expressed my belief that a general improvement of the native breeds of Bengal, in which I include those of Chutiá Nágpur, Behar and Orissa, is not possible unless and until the people have awakened to the necessity of securing a sufficient supply of fodder for their cattle. To distribute a few good bulls, foreign or native, to zemindars and others with the object of importing good blood into the country cattle is a very laudable idea, but is not likely to meet with more than a very limited measure of success. Well-to-do country gentlemen, intelligent and enterprising enough to understand and appreciate the good qualities in cattle, will no doubt avail themselves of the advantage of having a good bull to cover their cows; and no doubt under continued good food, treatment, and with suitable crossing, their issue will, in the course of a few generations, acquire the good points of an improved breed. So far the usefulness of stud bulls becomes evident, but it must necessarily stop there. As regards the ráyat's cattle, it is idle to hope for any general improvement, for whatever little good the importation of good and healthy blood may effect in the condition of their cattle, it will be soon lost through want of adequate nutrition. It may be assumed that ráyats will gladly have large sized and good milking cattle if they can have these at cheap prices; but this assumption is likely to be negatived by actual experience. Cattle is always looked to in India from a working point of view; milk is of only secondary consideration, and meat is never thought of or taken into account. Actual experience shows that large-sized cattle consume more food in relation to the work they give than small-sized cattle, while for many light field operations the former has no advantage over the latter. In these circumstances, it becomes highly questionable whether Bengal ráyats are at all anxious to add bulk and strength to the diminutive cattle by crossing with large-sized improved foreign breeds. Apart from this, it is beyond the power of most ráyats to maintain a staff

of large-sized bullocks for field work, and feed them on costly bought food for many months of the year; for unless they are so kept, they will soon die out or lose their useful characteristics.

What I have said above should not lead any one to suppose that I am altogether sceptical about the possibilily of cattle improvement in Bengal. Some improvement, though necessarily small, is possible; and as example works better than precept, we should strive for what even little good we can effect. I should accordingly offer the following suggestions on the subject of cattle improvement:—

English bulls are not likely to have successful crosses with native cattle; and for the future the Department should, when necessary, bring bulls from the Stud Farm of Hissar, where valuable animals are being now bred under scientific supervision. There are several other fine Indian breeds mentioned by Mr. Wallace in his notice of Indian breeds, such as the Nellore and the Kistna-river breeds; some bulls of these breeds may be also tried. The use of such bulls should be given only to such people in the neighbourhood as can afford to take proper care of their cattle; any indiscriminate use of a valuable bull will be productive of no good, while the reproductive powers of the animal may be seriously injured.

In my opinion much more can be effected by selection than by crossing. I must own that the people of Bengal have little or no idea of selection. With a view to teach them the value of selection, as also of judicious crossing, as means of raising the standard of our cattle breeds, the Government should start either an experimental breeding farm at its own expense, and still better induce some of the richest zemindars of the country to set up small breeding farms under the supervision of the Department of Agriculture. Such a farm need not be expensive and entail any loss on the owner. It will serve to show to the tenantry how much can be done by adherence to the principle of selection and crossing, and it is believed that many of them who have taste for the thing and money enough to indulge in the luxury of possessing fine cattle, will be induced to follow the example. The breeding farm will also afford a supply of good animals for sale, and thereby be the agent of disseminating good blood in the country.

CHAPTER IV.—Land Tenures.

History of the Land Tenures.—The legends of the aboriginal races corroborated by the remnants which still exist of the old organisation of the country afford material for a more or less authentic history of the land tenures of Chutiá Nágpur Proper. It would appear that while the country was still covered with unbroken jungle, the Mundáris, and subsequently the Uráons, effected a settlement on the central tableland. Although the two races did not intermarry, and in many respects remained distinct, they harmoniously amalgamated into one nation, and adopted the same system of government by *párhás* or village communes. The country was divided into groups of twelve or more villages, called *párhás*, each under a headman called the *Mundá* (lit. headman in Sanskrit). The *párhá* was presided over by the *Mánki*. Both the *Mánki* and the *Mundá* were only chiefs in matters affecting the peace of the commune; they had no proprietary rights in the villages over which they presided. Their sovereignty was probably acknowledged by gifts of produce and game killed in hunting. The *Mánki* was himself the *Mundá* of a village, who was probably elected to be the head of all the Mundás of the *párhá*, either for his wisdom or social influence.

Each village had, besides, its establishment of hereditary public servants who still exist. The most important of these were the *Mundá* or village headman already mentioned and the *páhán* or village priest. The *Máháto*, the remaining member of the Nágpur village commune, did not probably come into existence before the Hindus came in, because there could have been no occasion for exercising his functions when the villagers themselves were the proprietors of the lands they held. Each of these patriarchs was selected from a particular family or *khunt*, of which there were three in a typical village, viz., the *mundá khunt*, the *páhán khunt*, and later on, the *máháto khunt*. The lands held by a *khunt*, were shared jointly by its members, and could not pass out of its possession.

It seems highly probable that when the country was first occupied by the Mundáris and the Uráons, and for some time afterwards there was no person who could be properly called a *ráyat*, as every one was a citizen and proprietor in the eyes of the village legislature. In course of time, new people from elsewhere came and settled into the village; they were permitted to cultivate certain lands on condition of paying rents to the village proprietors. These latter, being the more privileged, were distinguished as *Hutu horos* or *bhuinhárs;* and the rent-paying cultivators as *Eta haturing* or ráyats. The bulk of the village lands was held by the *bhuinhárs* and the ráyats; a small portion was, however, set apart as *bonga loyang* or *bhutkhetá*, out of the proceeds of which the *páhán* for the time being was called upon to meet the expenses of *bhut pujá* or devil-worship.

Such was the state of the country when the Hindus first came in. At some time which cannot be precisely stated, but not later than the 9th century, the *párhá* chiefs (*mánkis*) were either conquered by, or voluntarily subjected themselves to, the Nágbansi Rájás of Chutiá Nágpur. It is probable that for a long time after the country had been conquered by the Hindus, the *párhá* constitution remained intact. The Rájás were probably content with periodical tributes from the *párhá* chiefs.

The rent of the *ráyatti* land, which used to be enjoyed by the village proprietors or bhuinhars, was soon appropriated by the Rájás. The rent-paying lands came thus to be distinguished as *rájhus* or king's share from the remaining village lands held and owned by the *bhuinhárs*.

Unfortunately, as the Rájás became great potentates among the Hindus, they grew to lespise the impure Kols, their subjects; and as the latter were disinclined to submit quietly to degradation and were not unmindful of what the Nágbansis owed them, they revolted against the conduct of their superiors, and the Rájás found it necessary to seek extraneous aid. Foreigners were gradually introduced, to whom lands were assigned for military services, who assisted or supported tne Rájás in their innovations and encroachments on the rights of their Kol subjects and in their frequent warfare with neighbouring chiefs. Brahmins were also encouraged by grants of villages to settle in the country and to civilise it after their own fashion.

Many of the chiefs were converted into Hinduism, and their descendants now go under the name of Rájputs. The Rájás of Sillí, Támár, Bundu, and Ráhe, &c., were in all probability *mánkis* or *párhá* chiefs who had embraced Hinduism at an early period, and taking side with the paramount power usurped the villages of neighbouring *mánkis*. But while most of the chiefs either became extinguished or converted into Hinduism, the great body of the Mundáris and the Uráons held steadily aloof, and retained the worship and rites of their primitive religions.

Besides supporting the Rájás in their course of internal aggrandisement, the military jágírdárs helped them in their constant warfare with neighbouring chiefs.

The course of aggrandisement by which the Nágbansi Rájás and their dependents became absolute masters of the country began with the demolition of the temporal authority of the *párhá* and village chiefs (the *mánkis* and the *mándás*). Except in purely social questions, each village came under the absolute control of Hindu landlords. They were next possessed by a wish of possessing some lands for their own cultivation; a portion of the *rájhas* lands were accordingly appropriated by the landlord as *mánjhihas*, which means literally the share of the *mánjhi*, or village-owner; and as he was mostly a resident proprietor, he required agricultural services from the ráyats and created the *betkhetá* lands out of the *rájhas*.

It seems possible that after the first quarrels between the Hindus and the Kols had passed away, the country enjoyed a settled form of government for a long number of years. During this time the village organisation, which exists more or less entire at the present day, was developed and ultimately took shape. The *máháto* was created with a view to supply a link between the landlord and his rent-paying ráyats. The *gorait*, the *lohár*, the *kotwár*, the *áhir*, some of whom might have existed in pre-Hindu times, became part and parcel of the village commune.

About the middle of the last century, however, the Rájás of Chutiá Nágpur began to fall into pecuniary difficulties; various adventurers from Behar and

the North-West came to the country, and either in payment of articles sold, or in return of services rendered to the Rájás, obtained farms of land in lieu of cash payment. Many villages were also farmed away to foreign *ticcadars*. The jágírdárs, who were equally impecunious, were not slow to follow the example of the reigning family. In this way, many Hindus, Sikhs, and Mahomedans came to the country. Being men of small incomes and having no sympathy with the Kols, they began to cast covetous eyes on the *bhuinhári* lands which paid little or no rent. Before the advent of the ticcadars and the class of petty jágirdárs, the rights of the *bhuinhárs* were recognized and respected, and after the authority of the mánkis and mundás had been crushed down, the Hindu landlords did not interfere with the proprietary rights of the bhuinhárs. When the Hindus first came to the country, they took from the *bhuinhárs* such services as they found most advantageous to them, such as attendance at marriages, following the chiefs in war, and other like feudal services. But with the advent of the ticcadars, began that long crusade against the *bhuinhárs*, which culminated in the Kol rebellion of 1831, and was ultimately put a stop to by the Chutiá Nágpur Tenures Act of 1869. As the necessity for the services lessened, and as the frequent calls for money made by the Rájás and their dependents upon the ticcadars and petty landlords necessitated similar calls by the latter upon the tenantry, half rents gradually began to be levied. The aggressive conduct of foreign ticcadars was supported by the Rájás and the large jágírdárs, who had hitherto lived on good terms with their Kol subjects, but whose growing impecuniosity now encouraged every manner of extortion and oppression. A great proportion of the bhuinhárs was ousted, and their *bhuinhári* lands were included in the *mánjhihas* or the *rájhas* according as the landlord found it convenient. It is certain that many Kol bhuinhárs have in this way lost their entire holdings, and been reduced to the condition of agricultural labourers. It has also thus come to pass that in many villages there is no *bhuinhári* land at the present day, the whole of it having been appropriated by the landlords more than 20 years prior to the passing of the Chutiá Nágpur Tenures Act. Not to speak of villages, entire parganás were swept clean of bhuinhárs, and thus escaped the operations of the Act.

The oppressions of the Kols continued unabated till the advent of the Lutheran Missionaries in Chutiá Nágpur. The Christian Kols soon imbibed a spirit of independence, and were not slow to understand their own rights. Waking from a long sleep of apathy and submission to the illegal demands of the landlords, they turned the table on their old masters, and took forcible possession of large quantities of land to which they had not the remotest title, under the plea that they were entitled to half the lands of the village. The riots resulting from this attempt necessitated the passing of the Chutiá Nágpur Tenures Act for the measurement and segregation of the actual amount of land held under *bhuinhári*, *mánjhihas*, *betkhetá*, *páhánai* and *máhátoi* tenures.

The actual circumstances under which this Act were passed may be gathered from the following extract from the Statistical Account of Bengal, volume XVI, pages 385 387:—

"Up to the year 1857 the policy of the principal and subordinate holders, with regard to the occupants of bhuinhári lands, was to aggravate in every way the pressure of the conditions, whether of service or of money payments, on which those lands were held; and to take any opportunity that occurred of extending the boundaries of the rájhas lands, or of claiming bhuinhári lands as an escheat when their occupant happened to leave the village. After the mutiny, however, the Christian Kols, who had been compelled to desert their villages and take refuge in the jungles, received assistance from the Relief Fund to enable them to recultivate their lands, and the number of converts largely increased. They, therefore, assumed an independent attitude towards the zemindars, and when the usual disputes arose at the reaping of the winter harvest, the rayats took the law into their own hands. After some serious riots had occurred, Lál Loknáth Sáhi was appointed to hold a summary inquiry into the matter, and to record the bhuinhári rights in 500 villages, where the discontent of the cultivators appeared to be strongest. He had, of course, no judicial authority, but the mere fact of the inquiry going on satisfied the cultivators

and the riots stopped. In 1862, however, Lál Loknáth Sáhi died; and the power of passing summary orders in Non-Regulation Provinces had in the meantime been taken away by the Indian Councils Act. Disputes, therefore, recommenced. The general discontent continued to increase till the 21st September 1867, when a petition purporting to proceed from 14,000 Christian Kols was presented to the Lieutenant-Governor of Bengal, complaining that the Mahárájá of Chutiá Nágpur had cut the petitioners' crops, and dispossessed them of their ancestral privilege. This was forwarded to Colonel Dalton, then Commissioner of Chutiá Nágpur for report, and referred by him to Mr. F. Batsch, the senior missionary. In a letter of November 1867, Mr. Batsch, while disowning the petitioners, pointed out that both the Christian and the unconverted bhuinhárs were continually dispossessed by the zemindars, who in most cases were supported by the police. Nothing, he added, short of an authoritative settlement of the question by Government could stop the cultivators from appealing to personal violence. To supply such a settlement, the Chutiá Nágpur Tenures Act was passed in 1869. The characteristic provisions of that Act may be summarised as follows:—

Bhuinhári, as defined in the Act, includes the four cognate privileged tenures known as bhútkhetá, dálikátári, páhánai, and máhátoai; while mánjhihas includes bet-khetá. The jurisdiction of the regular courts is barred, and Special Commissioners are appointed to demarcate and register the tenures which come under the Act, subject to appeal to the Commissioner of the Division. Pleaders (vakils) and law agents (mukhtárs) are not allowed to be heard without special permission. The term of limitation is fixed at twenty years, and the service conditions of bhuinhári tenures are allowed to be commuted for a money payment."

It has been already mentioned that the first act of aggression of the Hindus was to extinguish the authority of the *mánkis* and *mundás;* they succeeded everywhere except in parts of the Five Parganás, and in a portion of the country known as the *mánkipattí* in Sonpur on the southern slope of the central tableland. In these parts the *mánkis* and the *mundás* successfully withstood the efforts of the Hindus to extinguish them, and were eventually assured in their position by the latter. Originally the *mánkis* and *mundás* were in all probability mere chiefs, and not landlords, but after they had steered their little communities safe in the long contest with the Hindus, they assumed rights of proprietorship in the village or villages over which they had been presiding. The *mánki* has thus become the proprietor of the 12 or more villages under him, most of which are, however, held by *mundás* on payment of quit-rents to the *mánki*.

The above short history of the land tenures of Chutiá Nágpur Proper has been based on the account of the land tenures by Mr. E. K. Webster, C.S., for some time Manager of the Chutiá Nágpur estate under the Court of Wards, and on various reports relating to the subject by Baboo Rakhal Dass Haldar, First Special Commissioner under the Chutiá Nágpur Tenures Act. The subsequent understanding of the land tenures as they exist at the present day will be made much easier in the light of the narrative given above.

The subject falls naturally into four divisions:—I.—The estate of Chutiá Nágpur as a tenure held direct from Government. II.—Tenures held by Rájás dependent on the estate. III.—Maintenance of *jágír* and other service tenures held from the estate or from the dependent Rájás. IV.—Cultivating tenures. I had not much opportunity of making an independent study of the tenures included in the first three divisions of the subject; my enquiry specially related to the various classes of tenures under which lands are held by actual cultivators from the zemindars. The following description of the first three classes of tenures is therefore reproduced from Mr. Webster's report on the land tenures of Chutiá Nágpur; my own views where I have occasion to add to or alter those of Mr. Webster have been expressed in their proper place.

I.—The Chutiá Nágpur Estate.

"With the exception of a few villages belonging to the Rámgar estate, the revenue of which is paid in Házáribágh, the only estate in Chutiá Nágpur Proper paying revenue direct to Government is that of the Mahárájá of Chutiá

Nágpur. The country was first reduced by the Muhammadans in A.D. 1585, the thirtieth year of Akbar's reign, when Madhu Sinh, forty-fourth Rájá of Chutiá Nágpur, submitted to Shahbaz Khan Kambu, and became a tributary (málguzár) of the Imperial Government. Again in A.D. 1616, Rájá Durjan Sal, on falling into arrears of tribute, was seized by Ibrahim Khan Fathjang, then Governor of Behar, and sent to Gwálior, where he was detained for twelve years. On his release, he agreed to pay a yearly tribute of Rs. 6,000, and received a grant of his estate on that condition. Chutiá Nágpur Proper was ceded to the British in A.D. 1765; but the first settlement with the Rájá seems to have been made in A.D. 1771 by Major Camac, who granted a lease to Rájá Dripnáth Sáhi for a period of three years from A.D. 1772 to 1775, at an annual rent of Rs. (Benáres) 12,000, including sayer and rahdari, or customs and transit duties, but not kánúngo rusúm or accountant's fees. The Rs. 12,000 consisted of Rs. 6,000 mál or actual revenues, and Rs. 6,000 nazráná or additional exactions This is the amount stated in the lease, but in a copy of a letter referring to a report of Major Camac's, dated 18th August 1771, Mr. Webster found the rent stated at Rs. 10,000 mál and Rs. 5,001 nazráná; and this is the sum entered in the lease of A.D. 1781 and subsequent deeds. It is not improbable that the sum of Rs. 15,001 included the revenue of the Fiscal division of Tori bordering on Házáribágh district.

"In the lease of 1787 it is clearly laid down that the estate is saleable for arrears of revenue, and a similar provision is contained in the leases of later date. In spite of this, however, it has always been held, from reasons of policy, that the estate is not so saleable.

"The first lease granted to the Rájá appears to have conferred a permanent title, which did not need confirmation by the rules of 1793. But the point seems to have been raised as to whether, even under these rules, the assessment was fixed for ever, as I find that the Board of Revenue, in a letter dated 11th October 1799, held, in reply to a reference, that the settlement was permanent under Regulation I, 1793.

"In the leases granted to the Rájá, he was held responsible for the safe conduct of travellers and the recovery of stolen property. No allowance was made, nor were any lands granted him for the purpose of defraying the cost of the police, neither is there any clause in any of the arrangements concluded with him which can be construed as making him liable for a police contribution; yet in the year 1809 he was ordered to keep up police-stations and appoint watchmen. In 1841 he was empowered to call on his under-tenants to pay their quota of the expense. He filed in the office of the Governor-General's Agent a list of the under-tenants and the rents payable by them, and an assessment (bardóch) at four per cent. on the rent-roll was made by the Agent. The thánás were kept up by him till 1862, when the new police were introduced, since which date only a small fraction of this bardóch has been received from the Rájá, though he stills continues to collect it from the ilákádárs.

"Clearly, then, up to the end of last century, the Mahárájá was considered as a feudal chief, and not a zemindár; and until that time civil and criminal process was unknown. When a criminal was to be arrested, a small detachment was always deputed; and even in the collection of the rents due to the Mahárájá by his ilákádárs, on which an assignment was granted to the sazáwal, or revenue agent, a detachment was occasionally deputed to assist that officer. No attempt seems to have been made to interfere in the internal affairs of the province until 1808, when disturbances in Barkágarh, resulting from quarrels between the Mahárájá and his brothers, necessitated the deputation of an armed force to quell them, and the establishment of the police in 1809 followed. Even then the management and payment of the police were left entirely in the hands of the Mahárájá.

"The earlier leases, up to 1785 A.D., include the miscellaneous import and transit duties known as sayer, rahdári, &c.; but in the lease of 1787 A.D., there is a clause to the effect that a deduction has been made for sayer. I have been unable to find any record of such deduction. This estate does not appear in the list of estates in the Rámgarh Collectorate, in which an abatement for sayer was allowed; and as the rental payable under the leases which gave to the zamindár the right to collect sayer, and under those which expressly prohibited its collection, is the same, it is a fair deduction that no remission was ever

made. Mr. Smith, Collector of Rámgarh, writing in 1823 A.D, about the introduction of the ábkári, distinctly states that there had been no deduction. In that year, however, in spite of the Mahárájá's remonstrances, the ábkári or excise was taken from him by special pleading on the part of the Collector, who brought forward an improperly attested vernacular order of 1790, to prove that both the authorised and unauthorised sayer had been then resumed or abolished. The only conclusion one can come to is that the Mahárájá has been most unjustly treated in the matter. His estate was expressly exempted from the resumption of the sayer. The regulations did not apply, not only the settlement regulation, but the later ones, as Mr. Cunnyngham, Collector, on 9th October 1799, writes to the Board that he has not exacted interest on arrears of revenue from the Chutiá Nágpur estate, as the regulations do not apply. After the introduction of the ábkári, the regulations began to be put in force, but only partially, as up to 1839 no real property had been sold in execution of decrees; and I find that after the establishment of the Agency in 1834, it was remarked that up to that time the sale law was almost unknown.

II.—Tenures held by Rajas dependent on the estate.

"The estate may be divided into two portions—that comprised in the upper plateau, at an elevation of about 2,000 feet above sea-level; and that lying on the slopes of the hills and the lower steppe, at an elevation of about 800 feet. A large part of the former is held by jágírdárs of various denominations, while the whole of the latter was, and most of it is still, in the possession of dependent Rájás. The tenures of these chiefs were not creations of the Mahárájá of Chutiá Nágpur, but had been gained by conquest in the first instance, and were not completely reduced till the end of the last century. Támár, indeed, was at one time subject to Orissa; and it seems probable that it was brought under subjection when the Chutiá Nágpur Chief accompanied the Mahomedans in their invasion of Orissa. But Bundu and Ráhe were not finally reduced and made tenants of Chutiá Nágpur under regular covenants till 1793, when Major Farmar compelled their rulers to execute engagements to pay rents. Sillí appears to have been fully under the power of the Chutiá Nágpur estate some time before the country was ceded to the British, as some old papers show that rent was assessed on each village in that fiscal division. Barwa or Barwe was originally subject to Sargujá, and was not finally brought under the power of Chutiá Nágpur till A.D. 1799. All these estates are held under what are called bhándowá pattás, and on the failure of heirs male to the original holder, they escheat to the Chutiá Nágpur estate. Tori and Ráhe have already so fallen in. It is generally held that all under-tenancies created by the holders determine with that of the grantee, but I was told that in some cases in Tori the opposite had been ruled. No record of such cases could, however, be found; and what probably happened was that the Mahárájá was referred to regular suits against the under-tenants, which he did not institute. The present possessors of Bundu and Támár and Bárwe are not legitimate descendants of the men who were in possession at the time of the Permanent Settlement, so that now these tenures may be considered as creations of Chutiá Nágpur."

III.—Maintenance Jagír and other Service Tenures.

"As in all feudal estates, a large part of the country has been let out in jágír and other permanent under-tenancies. Before, however, entering on a consideration of the origin of each class of under-tenants, and their rights and liabilities, I proceed to describe the general conditions which apply to all.

"*Inheritance.*—It is admitted on all hands that no woman can succeed to any under-tenancy, and that there is no succession through the sister's son. On default of heirs male of the original grantee, the grant falls into the parent estate in the condition in which it was granted. The widow of the late holder is only entitled to a maintenance, proportioned to her rank and the value of the estate held by her deceased husband. This is an old and acknowledged custom, to which the courts give effect, and is a consequence of the grants being all hereditary. The eldest son succeeds, and the parent estate is not obliged to enter the name of any sharer on its books; if it does so, it is an act of grace, and for this a nazráná, or fine, is always paid. The sharers may

sue in the Civil Courts for a division of their property and get decrees, but the estate looks for its rent only to the eldest member of the family, whose name is entered in its books.* There is small doubt in my mind that before our rule, only direct lineal descendants were entitled to inherit on the same term as the last holders, and that at the furthest such right did not extend beyond first cousins; or if collateral heirs were allowed to succed, they did so on payment of a large nazráná. Even yet in the Tributary Mehals this custom, I believe, prevails. A relation beyond the first cousin inheriting has to pay a higher rent than his predecessor.

"*Power of Resumption.*—On this point the Board of Revenue, on 26th November 1792, wrote that the zemindar might, at his option, on the death of a jágírdar, either resume his tenure, or lease it to his heir at an increased rate. The Board of Revenue, Central Provinces, on 10th January 1823, expressed an opinion that the decision of the Board, that the whole of the jágír was resumable on the death or default of the grantee, was far too general. In fact, the power to resume grants existing at the time of the Permanent Settlement was expressly taken away by the lease granted to Rájá Dripnáth Sáhi; nor do I find that the Rájá has ever put forward any claim to resume such, except on failure of lineal heirs male of the grantee. As regards later grants, the question is different. Mr. Cuthbert says, writing about Palámau, but his remarks apply equally to this estate:—'In all the hill parganás, it has been the custom to grant jágírs to dependants and servants, instead of money remuneration. Under the late Rájá and his ancestors, offices appeared to have been considered hereditary, and most of the holders of these lands are the descendants of the original grantees. In some cases the Rájá appears to have resumed them at his pleasure, and bestowed them on others'. This was undoubtedly the case here, and for many years after A.D. 1790. The courts, however now refuse to allow the resumption of such enures, even when service is no longer required.

"*Alienation.*—On this subject I can state positively that under the custom of the country, a jágirdár has no right to alienate his tenure without the consent of the Mahárájá, and that any practice to the contrary which has grown up is entirely the product of our courts. All the officers immediately connected with this district in the end of last century, and the early part of this, have recorded their opinions on this question; and I believe the only reason why there is any doubt on the point is that an early Collector of Rámgarh, in his jealousy for the power possessed by the Political Agent, tried to introduce the regulations, regardless of the customs of the country, in the hope of thereby obtaining an influence over the people. The Courts, not allowing for the essential difference between the feudal service tenures here and the common under-tenancies in Bengal, which are entirely the creation of contract, have given effect to alienations; but the Mahárájá has invariably refused to admit that they are valid, unless made with sanction, acting on a letter from the Board of Revenue, dated 28th November 1892. The people show that they are aware that such transfers without sanction are invalid, as they always try to get a grant of the estate, for which they pay a large salámi or fee. The actual state of the case at present is this: jágírdárs alienate their tenures by sale and mortgage, but the name of the old jágirdár remains in the estate books, and receipts are given in his name, and on the failure of his heir, the tenure lapses to the estate free of all encumbrances. It is not right that such alienations should be allowed, as the estate rents are thus rendered insecure. The jágirdár having no property in the soil, but only a limited interest, the jágir cannot be sold for arrears of rent, and the original jágirdár often has no property from which the arrear can be realised.

"*Rakumát or miscellaneous cases.*—In addition to the rent the following payments are made:—(1) *Bardóch*, police contribution at 4 per cent. The Mahárájá was allowed in 1841 to collect this from his under-tenants, payable by all, unless especially exempted. (2) *Dák musháhará*, collection for the district post, levied from the under-tenants at Rs. 2-8 per cent. In 1863, when the contribution payable on this account by the estate was raised by Government,

* As a matter of custom, we find that maintenance jágírs are (with the exception of large jágírs granted by Mahárájá to his immediate relatives) divided equally among the sons of the holder. The eldest gets a little more, and the rent is paid through him.

BENGAL SECRETARIAT LIBRARY

the Mahárájá tried to raise the rate to five per cent., and about half the under-tenants now pay at this increased rate. (3) *Parkhái*, at 1 per cent., is supposed to be paid to the poddar, or treasurer, for the trouble of counting the rent. (4) *Tip rusúm salámi* is paid by each under-tenant, without regard to the number of villages held by him. *Tip rusúm* is said to have been imposed when the ilákádárs used to be much in arrears, and were made to give or *tips* promises to pay; the *tip rusúm* being taken for the trouble of writing the promise. (5) *Pánriaí*, at Rs. 2-8 per cent., used to be taken by the *pánre* of the year, that is, the officer who had charge of the records, and wrote the leases. (6) *Diwání*, one per cent. to the *diwán*, one-half per cent. to the *mahant* of Buddh Gayá. (7) *Mutsadián* or clerk's fees at Rs. 7-8 per cent. is paid only in the fiscal division of Tori. In some Fiscal divisions a cess called (8) *thákurái* is paid. This is of two kinds—*thákurái* proper, paid at the rate of Re. 1 per village by by every under-tenant to whom the Mahárájá gives *pán* or betel at the *Dasahará* festival; and *tirbichái* levied at the Bijáya Dásami festival, when the Mahárájá shoots an arrow, which Thákúr Padam Lochman Sáhi picks up, and gets in return an order to collect Re. 1 from every village. In addition to these regular payments, a demand of Rs. 4 per year was made from each under-tenant when he came to make up his accounts, and was paid in the time of the Mahárájá, but has not been collected by the Court of Wards. Of this sum, Re. 1 went to the *díwán*, Re. 1 to the *pánre*, Re. 1 to the *muharrir*, and Re. 1 to the Mahárájá.

"*Rent.*—The way in which rent was assessed was as follows:—The amount of cultivated land in each village was estimated, the unit being the *khári*; and as this rent was fixed at certain rates varying from Rs. 20 to Rs. 30 per *khári*, it seems probable that the only land taken into account was the *rájhas* or rent-paying land. The instalments in which rent was payable were the *panchá* (including the *sonámati*), the *mángni*, and the *hákimí*. I have made careful inquiries, but I have not been able to obtain the slightest information as to the date when rent was first imposed. I feel certain, however, that originally only the *panchá* was paid, which was probably expended in the expenses of the *Dasahará* festival. Afterwards, when intercourse with the outer world became more frequent, the expenses of the Mahárájá naturally increased, and *mángni* was added, and at last, when a tribute was demanded from the country by the Mahommedans, the *hákimi* was imposed to meet the cost of the tribute. The old account books are called *bahi panchá*; they contain no mention of the *hákimi* instalment, and the *mángni* is entered in some of them in irregular places, at the side or at the end of the accounts, as though it were an after-thought. The *panchá* was probably at one time Rs. 5 a khári. In a rent-roll of 1739, I notice that the *mángni* was increased. The rents of almost all the jágírs have been changed within the last hundred years. In 1788 A.D., I find that the *baráhil* or land agent paid Rs. 25 per *khári*, thus divided:— *Panchá*, Rs. 5; *hákimi*, Rs. 10; *mángni*, Rs. 10. Between that time and 1792, an addition called *barhánta* was made, being generally equal in amount to the *panchá*, but in some cases only one-half of that sum. Again between 1788 and 1811, there was an increase of three annas in the rupee of the original rent, and *báttá* for changing the *sikká* into the Benares rupee was also added. In consequence of this change in the rent, there is scarcely a jágírdár in the country who holds on a lease of a date anterior to 1793. Some few of the jágirdárs' leases contain a clause that no more rent than is entered in them will be demanded, but most do not; so that if the regulations apply, they would be liable to enhancement under section 51, Regulation VIII, 1793.

"*Madat.*—In addition to the rent and *rakumát*, the *ilákádár's* or land-holders were liable to be called upon for *madat*, a demand varying in amount and frequency, according to the necessities of the Mahárájá. It is undoubtedly one of the old feudal imposts, and it has been paid several times within the last twenty years. Indeed, it has been collected by the Ránis of the late Mahárájá, ever since the estate has been under the Court of Wards.

"*Nazráná.*—As a rule, there is a fine payable to the superior on the succession to all under-tenancies, which in the case of some larger holdings is a fixed sum; but in general, the amount is settled in consideration of the value of the holding. This custom is dying out. No attempt to enforce it in the Courts has been made; and it cannot, therefore, be affirmed whether the demand

would be considered legal or not. But as it is an incident to all feudal tenures, I should consider the demand legal, more specially as the Mahárájá at the time of the Permanent Settlement had no opportunity given him of assessing these customary payments, and consolidating them with the rent."

The various classes of maintenance *jágírs* and other permanent service tenures are as follow:—(1) Maintenance grants or *khorposhdárí* tenures, (2) *baráik* tenures, (3) *brit* tenures, (4) *ámenaik* tenures, (5) *hujurhá* tenures, (6) *bhitariáná* tenures, (7) *ghátwálí* tenures, (8) *bhuiya* tenures, (9) *britbhandar*, tenures or permanent leases, (10) *lakhiraj* tenures and (11) *debottar* tenures, *Bandhik*, *Hindu hárámi*, *tángor*, *chibá brit*, and *kusáha* appear to me to be neither forms of pottahs as Mr. Webster has described there, nor distinct tenures, as held by Dr. Hunter in page 374-75 of the Statistical Account of Bengal, but they represent either the origin or some important condition of the tenures. Each of them is described below in detail:—

(1) *Maintenance Grants.*—"As the succession to the Ráj follows the custom of primogeniture, it became usual for the Rájás to allot maintenance holdings to their near relations. Such grants are entered in the old registers under the headings of the Bhái, Thákurái, and Nágbansí tolás. Unlike similar grants in Pánchet and other parts of the country, they are hereditary, and only fall in on default of heirs male of the grantee. Although not originally transferable, they are now commonly alienated. The general rules of inheritance noticed above apply to these tenures. The eldest brother of the Mahárájá is called *kunwár*, and the next *thákur*; the former is entitled to a grant of land, the gross rental of which brings in Rs. (Benares) 10,001 a year, while the latter receives a grant of only Rs. 5,001. These grants usually include some *debottar* and other service tenures; and on failure of heirs of these under-tenants, the maintenance-holders can resume their villages, and take them under his personal management. The titles of *kunwár* and *thákur* are not hereditary; the sons are called *Láls*. The title of *kunwár* has, I believe, never been continued, but that of *thákur* has been, on payment of a fine for the honour. Thus, the Govindpur Thákur is liable to a fine of Rs. 1,000 on succession; and Jitnath Sáhi of Basargarh paid Rs. 600 when he inherited his tenure. Maintenance-holders pay the customary *ábwábs*, with the exception of *dákhil khárij* or fees for entering their names on the estate rent-roll, *salámí* on acquiring their tenure, and the yearly *salámí* fees. The heirs of these maintenance-holders have no right to demand a partition of the property. The eldest son is the owner, and the others are only entitled to maintenance from him. If the heirs of any such under maintenance-holder fail, the grant reverts to the chief of the family, and the other heirs have no interest in the lapsed grant.

"(2) *Baráiks*, formerly called *khukráwár tolás*. These tenures correspond to the *chero* and *bhogtá* tenures of Palámau, whose origin is well explained by Mr. Walpole in a letter dated 6th July 1809:—'In former years, long prior to the period when these provinces became subject to the dominion of the British Government, the Rájás and independent chiefs of bordering districts were continually engaged in broils and petty wars amongst themselves, attended by a rabble composed of all manners of persons armed in all manners of ways, whom the hope of plunder allured to offer their services. The ravages caused in consequence were so great, that it became necessary for the heads of the contending parties to contrive some method of keeping in a constant state of readiness and attendance a sufficient number of followers, not only for the purpose of defending themselves against sudden enterprises, but with the view also of having the power to make reprisals upon their neighbours. The method pursued in consequence by the Rájás gave rise to the now long-established custom of bestowing lands in *jágír*, a feudal tenure, the very counterpart to those engagements which once existed to so great an extent in many parts of Europe. These *jágirdárs* obtained *sanads* from the Rájás for the grant of lands, under an engagement of feudal vassalage, or in other words, of being at all times ready to assist the Rájá with a certain proportion of armed followers, whom they maintained upon their *jágírs*, either in the defence of the Rájá's country or invasion of neighbouring districts. From the time that the dominion of these provinces became vested in the British Government, the original necessity for the personal services of the *jágirdárs* gradually lessened. It was accordingly deemed equitable that the *jágirdárs* should pay a certain yearly portion

of revenue to the zámindár, in proportion to the value of the lands held by them, in lieu of the services formerly required. Agreements to this effect have in former periods been concluded between the *zamíndárs* and *jágirdárs*, which, however, were productive of no good effect, and only answered the purpose of creating quarrels between the parties; and the *jágirdárs* have ultimately paid what they pleased, which, as may be readily conjectured, was not much.' It may not here be irrelevant to observe that the grant of *jágírs* has not been confined to the consideration of military services alone. It has likewise been customary to bestow them, in some cases, as a reward and compensation for services previously performed; and in others, in the hope and expectation of future services of a miscellaneous nature. These *baráiks* were the militia of the country. When they were first introduced, I cannot say, but the ancestors of most of the men who now hold these *jágirs* are entered in the rent-rolls of 150 years ago. They must have come from the North-West, and they claim to be Rájputs. The services taken from them have now fallen into disuse. All that they are expected to do is to come to the Mahárájá when called, and always to be present at the *Dasahárá* and other great festivals. In fact, as Mr. Cuthbert said of Palámau, these tenures appear to be considered by their holders more in the light of *mukarrarí*, *istimráris*, or permanent holdings at a fixed rent, than what are generally denominated *jágírs* in other parts of the country. The *baráiks* have a *chaudharí* or headman, who receives a certain yearly deduction from his rent called *siropá*. The *baráik* of Maká was formerly the chief, but of late years the *baráik* of Choreá has taken his place. All orders to the *baráiks* were originally conveyed through him. When a call for *madat* was made, he was the man with whom the settlement of the amount to be paid was concluded; he occasionally gave a written promise to pay the contribution, and he assessed the money among the other *baráiks*. Once in in every three years the *baráiks*, like the *purba páthá brittiás* noticed below, used to give a contribution of Rs. 3,000 called *tehsálá madat*, but this has been discontinued for many years. They used also to give Rs. 3 per *bhárí* as *negi ámlágán* or fees to the clerks of the Máhárájá's office. A great many of the villages held on this tenure are *betalab*, *i.e.*, rent-free. Probably it was intended that the expenses of the armed retainers should be defrayed from their produce. There are also many *debottor* villages, but it is doubtful whether the proceeds of these are still devoted to religious purposes. Some *bandik* villages are also included in the *baráiks*' tenures; but the holders do not admit there is any difference between villages held on this title and ordinary *jágírdárí* conditions.

(3). "The *brittiás* are divided into two sections—the *purba páthá* (*i.e.*, the eastern) and the *pachim páthá* (*i.e.*, the western); but I have been unable to learn what is the difference between the tenures. They are of very ancient date, and are all held by Bráhmans. It does not appear that they were granted for any special service; probably all that the holder was expected to do was to be present at the chief festivals and to pray for the well-being of the Mahárájá on other occasions. The *brittiás* paid the *tehsálá madat* and *negi ámlágán* at the same rate as the *baráiks*, and have, like them, a *chaudharí*, who performs the same duties. In 1786, the rent payable by the *brittiás* for *debottor* villages was Rs. 30 a *bhári*; and there was a deduction made to each *jagirdár* for *siropá* at a rate of from Rs. 3 to Rs. 11 per *bhári*. In 1792, an increase of seven annas per rupee was levied from almost all. It was in general calculated on the total rent, before deduction of *siropá*, but sometimes on the balance, after the deduction had been made. In those few cases in which there was no *siropá* entered in the books of 1786 no increase was levied, and it is suggested that these were later grants. After this date, *siropá* was only allowed to the *chaudharí*.

(4). "*Amenáik*.—The holders of these tenures are connections by marriage of the family of the Mahárájá, and most of them bear the designation of *bháyá*. In this class are now included the holdings of the *jamádárs*, most of whom are Mahommedans, which used to appear in the old books under the headings *sipáhí*. These *jamádárs* are bound to attend on the *zamíndár* and execute his orders. They usually received a small pay when they were in waiting. Some of the *jamádár tolás* seem to have been at one time classed as *tupchí*, along with the tenures of the Mirdahas. These were granted in consideration of the holders keeping up a certain quota of *barkandázs*.

(5). "*Hujurhá.*—These seem to be what are entered in the old papers as *ohdár tolás*, probably because the tenure of the *díwán*, who was called *ohdár*, is entered under this head. It includes the service tenures of the *díwán musáhib*, writers, *pánres* or record-keepers, *bakshis* or pay-masters, cooks, *khawashins*, superintendents of elephants and horses, *head-kapargharias*, *motiojha* or witch exorciser, *kabirajs* or native physicians. Many of these tenures are of old date; and though at one time they may have been resumable, they are now by custom not liable to resumption, as long as services are performed.

(6). "*Bhitariáná.*—The tenures of *khidmatgárs* or table-servants, barbers, gold and silversmiths, grooms, *chobdárs* or mace-bearers, palanquin-bearers, *khákis* or mendicants, and prostitutes, come under this head. They are all service tenures, and the holders when in waiting received pay like the preceding. These tenures are believed to be liable to resumption when service is no longer required, and are not alienable by the holders.

(7). "*Ghátwáls.*—The tenures of the *mánki* of Jonhá, the *parganáit* of Pithauriá, the *ilákádárs* of Bundu and *Sili* and others are *ghátwálí*. The holders are bound to keep the *gháts* or hill-passes clear, and to furnish men to guard them. Their contracts are made with the Chutiá Nágpur estate; and so far as I can find out, the Government has nothing whatever to do with them, nor could it under any law in force compel the *ghátwáls* to be kept up, though the estate could resume these tenures if they were not. Most of the men who guard the passes receive a monthly pay, but there are hereditary *ghátwálí* lands at Edalhátu and Taimárá on the Bundu Pass, and in Kasidi on the Jonhá Pass. The tenure of the Jonhá *mánki* is one of the oldest, but he holds under a lease of a late date, and his rent has been changed of late years. His tenure is now entered under the *hujurhá* as a service one; and he holds two villages as *chibá brit*, which he says that he got before he was granted the parganá of Jonhá. The tenure of the *parganáit* is not so old as that of the Jonhá *mánki*; part of it, indeed, Garh Barugayá, he only obtained within the last hundred years. He is a Bhogtá by caste, and came from the north-west. The parganáits were officers who were entrusted with the collection of rents in a parganá.

(8). "*Bhuiyá* tenures are divided into three sub-classes, *bhuiyá* proper, *garh bhuiyá* and *hujur bhuiyá*. They are found in Biru, Bassiá, and Baragayá. In the two former, the holders are Rautiás, a sub-tribe of the Gonds; and in the latter, Bhogtás. All hold on terms of military service. The *bhuiyá* had to protect the estate and keep the passes, and it is probable that they were nothing more than subordinate *ghátwáls*. The *hujur bhuiyás* were body-guards, and the *garh bhuiyás* were specially attached as sentries to the palace."

(9). *Brit-bhándár tenures.*—This is another name for *bemiádí thiká* or *ijárá* of now-a-days. Like the latter, a *brit-bhándár* tenure is held on a permanent lease at a fixed rent, the zemindar being entitled to resumption on failure to pay rent in proper instalments. Some tenures of this nature have been resumed, notwithstanding there were heirs alive, but the courts have held that such resumption is not legal, as the conditions are hereditary. The rent of these tenures is inclusive of all *ábwábs*. No service is due from the holders.

(10). *Lákhiráj* or *betalab tenures.*—There are a good many such tenures of which the holders pay *bardóch* and *dák musahará*, but no rent or *salámi*. These include what are entered in the old papers as *athittolás* which were rent-free tenures granted to *fakirs*; and probably also *bramhottar* villages which usually pay no rent. *Lákhiráj*-holders do not possess any *pottahs* nor any receipts as they pay no rent. They cannot, therefore, show their claim to hold rent-free to be valid. The holders of *lákhiráj* villages have therefore shown of late years a desire to have rent assessed, as they have an idea that rent-free tenures are not legal.

(10). *Debottar.*—The holder of *debottar* lands holds them on the condition of meeting the expenses incidental to the worship of a certain god or goddess. Some *debottar* villages are included in almost all *jágírdári* tenures of any extent; and even when one village only formed the *jágír*, part of it was often set apart for religious purposes. The lease sometimes contains a provision that the village is to remain in the possession of the grantee and his heirs, so long as he continues to perform the service. Strictly speaking, these tenures are not alienable; and when they are alienated, the alienee always declares that they are held as *debottar*. Rent is paid by most, if not all, of these tenures.

When the heirs of the original grantee fail, the tenure is often regranted without any stipulation as to its remaining *debottar*.

It has been said in a preceding paragraph that *bandhik*, *Hinduhárámi*, *tángor*, *chibábrit* and *kusáha*, merely represent the manner of origin or some important condition of a *jágírdárí* tenure.

A large number of the *jágírdárí* tenures were created on payment of *bandiápán*, or amount advanced or paid to the Mahárájá at the time of conferring the *sanads*. Some of these *jágírdárí* tenures contain a clause that the village mortgaged, that is for which the Mahárájá has received an advance, is to be held as an hereditary tenure, but in most there is no such condition. About the beginning of the second quarter of this century, the díwán of the late Mahárájá Jagarnáth Sáhí tried to recover many *jágírs* on the plea that *bandiápán* implied mortgage, and that the amount of the mortgage had been repaid out of the usufruct of the lands. The holders of *bandhik jágírs* consider them just the same as any other *jágírdárs*, and custom has probably entitled them to entertain this view.

Tángor implies the origin of certain *brit* tenures, all held by Bráhmans. Its origin is thus described: "If a Bráhman failed in his attempt to get a village from the Mahárájá by fair means, and was willing to sacrifice himself for the benefit of his heirs, all he had to do was to betake himself to a village, taking care to select a good one, and deliberately hang himself therein. The only method of expiating the guilt of possessing a village in which a Bráhman had hanged himself, was by getting rid of the accursed spot, and giving it away in *jágír* to the heirs of the deceased."

Chibá brit also explains the origin of another class of *brit* tenures. "The Mahárájá, having finished chewing his *pán* or betel, threw it away. Some great admirer picked up the choice morsel and put it in his mouth. Whereupon the Mahárájá, as recompense for his great devotion, gave him a village or two in *chibá brit*."

Kusáha is a *brit* tenure held generally by a good class of Bráhmans (the *Sakaldwípís*), and receives its name from a piece of *kusá* grass being given as a token of possession.

IV.—Cultivating tenures.

Chutiá Nágpur Proper may be divided into three distinct regions, of which the cultivating tenures are more or less distinct from one another, viz:—(1) the plateau of Chutiá Nágpur; (2) the Five Parganás, and (3) parganá Torí. These three regions are predominated over by three distinct tribes—the Uráons, the Mundáris, and the Bhogtás. On the borders of the habitats of these races, the tenures merge into one another. The tenures of each of these regions are separately treated below:—

Tenures on the plateau of Chutiá Nágpur.—The tenures of the plateau may be divided into three classes—(1) *Mánjhihas*, or *Mánjhás*; (2) *Rájhas*; and (3) *Bhuinhárí*.

1. *Mánjhihas.*—(*lit.* the share of the *mánjhí* or the village-owner). *Mánjhihas* includes those lands in the village which are in the immediate occupation of the landlord, or if the village is let out on lease, of the lessee or *ticcádár*. The *mánjhihas* lands may be cultivated by the landlord or his assignee himself, or may be let out to ráyats on an annual arrangement, called *saiká*, under which the ráyats cultivate the lands themselves, and bind themselves to deliver certain pre-arranged quantities of grains to the landlord. *Saiká* cultivation is never profitable to the ráyats, as the quantity of grain demanded is roughly about half the produce in a year of good harvest; and when the *mánjhihas* is cultivated by the landlord or his assignee, he is entitled to get help in its cultivation from all *chatisá* ráyats and *bhuinhárs*. Such compulsory service is known as *bet-begári*, and although the amount of labour which each ráyat is bound according to the condition of his tenure to render to the landlord in the cultivation of the *mánjhihas* is invariably fixed, the right to levy free labour has been highly abused by the landlords.

At planting and reaping times, small allowances of food are usually given to the ráyats working in the *mánjhihas* fields. In apparent compensation for *bet-begári* each *chatisá* ráyat is given a small quantity of paddy land rent-free, known as *betkhetá*, *i.e.*, field (given in payment of) free-labour; but the profits

accruing out of its cultivation are too small to remunerate the ráyat for the labour given to the zamindár free of charge.

No length of occupation by ráyats or any other body of *mánjhihas* gives any right of occupancy to the occupier. During the long quarrel between the *zamindárs* and the *bhuinhárs* prior to the passing of the Chutiá Nágpur Tenures Act of 1869, there was constant dispute between the two parties as to the *mánjhihas* and the *bhuinhárí* lands, which were constantly appropriated into one another according as this party or the other had the upper hand in the village. Under the Act, the *mánjhihas* and the *bhuinhárí* lands were demarcated, their quantities in each village fixed, the names of the holders registered, and a long and bitter struggle thus put an end to.

2. *Rájhas tenures.*—The *rájhas* tenures are the *chatisá*, the *murile chatisá*, the *utakar*, the *betkhetá*, the *máswár*, all of which pay rent, and various *rent-free service* tenures.

(1). *Chatisá.*—The name is derived from the holder being obliged to obey the "thirty-six" standing orders of the landlord, or what is more probable, to deliver to the landlord "thirty-six" distinct items of rent, labour and agricultural produce. *Chatisá* is sometimes called *lekhá* in Chutiá Nágpur, and corresponds to the *jivan* of Házáribágh. The synonym *lekhá* evidently means "written," and means the amount of land written against the ráyat's name in estimating the quantity of *ráyattí* land in the village. Some interpret the word as "picture," having the head, body and legs which correspond to the three parts of the low-land included in a *chatisá* holding, and known as *máthá* (head), *mágiyá* (middle), and *láthá* (feet). A *chatisá* holding includes some low land or *don*, some upland including *dihárí* and *tánr*, and the ráyat's homestead or *bári*. The basis of the holding is, however, the *don* on which the assessment is made. Each *páwá* of *chatisá* generally consists of one *páwá* of good *don* land with a complement or *lágán* (*lit.* attached) of upland varying in amount from 5 to 20 *káts* according to the extent of such land in the village. In some villages two *páwás* of *don*, and in a very few three *páwás*, go to make up one *páwá* of *chatisá*. The chief *páwá* is called *máthá*, the second *mágiyá*, and the third *láthá* (*vide* supra).

Rights attaching to chatisá.—(*a*) *Right of occupancy.*—The right of occupancy is inherent in the *chatisá* tenure. It is admitted that directly possession is obtained of the holding, the ráyat cannot be ejected, save through the civil court. The right of occupancy is, however, largely modified by old custom. Thus, if a new settler comes to the village and wants land, any old settler who has a large quantity may be called upon by the *máháto* and *páhán* to give up a small portion for the benefit of the new-comer. So also if a man held more land than was necessary for the support of his family, which had become less numerous than it used to be, he was liable to give up a small portion to any man who had not enough for his family requirements. These customs are still in force in villages in which the Kols predominate, but are showing a tendency to die out. The custom of redistributing the *chatisá* lands periodically among the tenants, and of giving *gotí* as a symbol of possession, still exists in out-of-the-way villages. It is opposed to ideas of security and improvement, and is inconsistent with the steady increase of pressure of population, and as such is doomed to die out in a few more years. There is another custom according to which a *páikást*, or non-resident ráyat was obliged to give up his holding in favour of a landless resident. This is now, however, limited, for if the *páikást* ráyat has acquired a right of occupancy in the holding under the law, he refuses to recognize such limitation. The general tendency encouraged by the law courts may be expressed by saying that all *chatisá*-holders, resident or not, are occupancy ráyats, independent of the length of occupation, and cannot be ousted from his actual holding save under the provisions of the law.—(*b*) *increase of rent.*—Claims to hold *chatisá* at fixed rents are often made, but in view of the fact that rents have been of late years enhanced in most villages, it cannot be denied that *chatisá* is liable to increase of rent. Mr. Webster says:—"In most villages of which I have seen rent-rolls, I find that rents have been considerably raised during the last 30 years. One of the Collectors of Ramgarh, writing about 1820, notices the general rise in the rate of rent in this district, and says 'land which a few years ago paid Rs. 2 is now paying Rs. 9.'* Scarcely any land now pays as low a rate as Rs. 9."

* Evidently per *khárí*.

(*c*) *Inheritance.*—A *chatisá* holding is inherited by the sons of the deceased holder in equal shares. The ráyats claim the right to be able *ipso motu* to divide their holdings amongst their sons, and the zamindár must recognize each son as a separate ráyat, and give him rent receipts in his name The usual custom is that the holding is entered in the name of the eldest son, through whom the rent is paid, and as he is the person held responsible for rent, he gets, in consideration of this circumstance, a somewhat larger share of the holding. The rule holds good with *chatisá* tenures equally with most *jágírdarí* tenures that no woman can inherit. In the event of a tenant dying without male issue, his holding may be inherited by his brothers, first cousins, nephews, and such other near male relations. (*d*) *Alienation.*—The old custom of the country, which is now becoming fast obsolete, is opposed to the alienation of a *chatisá* holding by mortgage or sale. The ráyats of many villages in which Hindus from Behar have largely settled claim the right of mortgaging *ipso motu* their holdings; and the ráyats of several large villages, like Chutiá and Lohárdagá, claim the right to sell their holdings. The custom of alienating ráyattí land is believed to have been introduced from Behar by Koeris and others. The manner of alienating *chatisá* is precisely the same as with *jágírdárí* tenures The rent is not paid directly by the transferees, but always through the original holders in whose name the holding stands; and so long as this is the case, the zamindár can have no ground of complaint against the transfer, and the Courts refuse to sanction the resumption of the tenure. The practice of subletting ráyat's land is very common; such subletting is not recognized by the zamindár, who looks always to the tenant for rent.

Liabilities attaching to chatisá.—The liabilities of *chatisá* are rent, road and public works cesses, various *ábwábs* or illegal cesses, and *bet-begárí* or forced labour. Full details of all these demands will be found in pages 142—6 under Statistics of Rent.

(2). *Murile chatisá.*—Is, as its name implies, *chatisá* shorn of its appendages of upland and different varieties of *don* land. One *páwá* of this tenure consists of one *páwá* of don alone. It pays rent at *chatisá* rates, generally without *ábwábs* or cesses and *bet-begárí*. It enjoys all the rights of *chatisá* tenure.

(3). *Máswár-maniswár.*—When a ráyat holds upland in excess of the complement (*lágán*) attached to his *chatisá* holding, he is said to hold the excess as *máswár*. *Máswár* lands are usually cultivated once in two, three or more years, and rent is paid only for the year in which the crop is grown and cut. No rent is due for the year in which the land lies fallow. Under these circumstances, no right of occupancy can possibly accrue. *Máswár* is subject only to rent, which is usually paid in kind, being the same as the quantity of seed sown. Thus for the quantity of land which can be sown with one *kát* of paddy seed, there is taken 1 *kát gorá* paddy, 14 *sers sarguzá*, 14 *sers urid*, 16 *sers kalai*, 20 *sers gondli*, and 14 *sers máruá*. Occasionally a money-rent of 4 *annas* per *kát* is taken.

(4). *Utakar.*—It is also called *bálkát*, and corresponds very nearly to the *utbandí* tenure of Nadiyá. The tenure includes only *don* land and has no *lágán* of *tánr* or upland. Rent is paid only for the year in which it is cultivated. *Utakar* tenure is common in those villages in which the Behari Hindus have settled. Being not liable to *bet-begárí* and miscellaneous cesses, it is in favor with them; besides well-to-do Hindu cultivators do not care much for upland crops which are not half as paying as *don* paddy. *Utakar* land is now in continuous cultivation almost everywhere, although in the origin, as its name implies, it used to be cultivated some years and lie fallow in others. It is liable to pay rent, usually a lower rate than *chatisá*, but in those villages in which *chatisá* rates have remained unchanged for a long time, the *utakar* rates are higher than the *chatisá* *Utakar* does not carry with it any right of occupancy, although at Lohárdagá and Khuntí, I have heard *utakar* ráyats claiming the right by virtue of long occupation. The only liabilities are rent, Road and Public Works cesses, and among *ábwábs*, only the *dussáin beheri*. It is not subject to *bet-begárí*.

(5). *Bet-khetá.*—In a village in which there is a large amount of *mánjhihás* land in *khás* cultivation, and the amount of labour due from *chatisá* and *bhuinhárí* ráyats in consideration of their holdings is not sufficient for its cultivation, the zamindár gives to each *chatisá* ráyat a small piece of inferior lowland. This he is allowed to hold rent-free on condition of giving as much labour over and above

the amount due from him as a *chatisá* ráyat as is needed for the cultivation of the *mánjhihas*: in fact until the cultivation of the latter is completed, the ráyat is not allowed to touch his own *bet-khetá*. No right of occupancy can be acquired in *bet-khetá* land, and the zamindár has the full power of taking it away whenever he pleases.

(6). *Korkar*, otherwise called *ákriát*, *baiballá* and *sáj-jot*.—It means land 'made by digging,' and consists of low paddy land which has been prepared from high land by digging and levelling by the individual exertions of the ryot. The reclaimer has a right of occupancy in such land, from which he cannot be ejected on any pretence. The rule of assessment is as follows:—After the *korkar* has been prepared, the maker is allowed to hold it rent-free for three years, after which rent is assessed at half the rates levied on *chatisá* or *utakar* lands according to the custom of the village. The rent so assessed is not liable to change so long as the rates for *ráyattí* land remains unchanged, but in the event of the latter being increased, a corresponding addition is made to *korkar* rates. In some villages half-rents are levied directly after the completion of the *korkar*, while in several others the rent-free period extends to the fifth or sixth year after completion. The ráyats allege that *korkar* made by a ráyat from the upland in his own holding is not liable to rent: this is denied by the zamindár, and is not the rule in practice. It seems, however, possible that in former days such *korkar* was not liable to assessment, being included in the *don* of the *chatisá* holding. In this way the size of the *páwá* and other measures of *don* land has come to vary so widely in different villages, and even often in the same village. The rule of succession with *korkar* is the same as with *chatisá* tenure. There is considerable doubt as to the transferable character of *korkar*. It is usually mortgageable subject to the same limitations as *chatisá* tenure. The right of sale of *korkar* is asserted only by a few villages, the purchaser acquiring the full rights of the seller. No *ábwáb* or *bet-begárí* is due from a *korkar* holder.

(7). *Rent-free service tenures*.—These are held by various village servants —the *máháto*, the *páhán* and the *múndá*, the *pánbhárá*, the *bhándári*, the *goráit*, occasionally the *lohár* and the *áhir*, the *dhobí* and the *házám* (*vide* pages 28—30 on village officials). It is very doubtful that the *páhánái* lands are *rájhas*: they are believed to be a portion of the *bhuinhárí* land of the village, set apart for religious uses. The *máhátoi*, the *múndái* and the service tenure of the *pánbhárá* are strictly speaking *rájhas*, but they were specially distinguished and demarcated by the Bhuinhárí Commissioners, and the zamindár has been deprived of the power of appropriating the lands included in these tenures. As regards the other service tenures, they are all *rájhas*, and their creation and abolition rest entirely with the landlord.

The term *páhánai* includes several tenures, all of which have the generic name of *bhutkhetá*. These are—(1) *Dálikátárí*, a rent-free tenure in the possession of the *páhán*, who devotes its proceeds to the worship of *Jahír Burí*; (2) *páhánai* proper, which is a personal rent-free service *jágír* of the *páhán*, generally containing one *páwá* of land: usually there is no land known as *páhánai* proper, and the term includes as a rule all the other *bhutkhetá* lands in the possession or control of the village priest; (3) *desaulí bhutkhetá*, the produce of which is devoted to a grand triennial feast in honor of *Desaulí*, the divinity of the grove. *Desaulí* land is either cultivated by the *páhán* himself, or is let out to ráyats. In any case it will not be cultivated for more than three years in succession by a single person, as such conduct is believed to be strongly resented by the god in whose honor the land is set apart.

Besides the *páhánai bhutkhetá*, which should be considered as service tenures, being held by the *páhán* for the time being, there is another kind of *bhutkhetá* land in the possession of private individuals. As regards its incidents, the private *bhutketá* differs in no way from the *bhuinhárí* tenure, and will be accordingly treated in a succeeding paragraph.

3. *Bhuinhári*.—The history of this important tenure has been related in the first part of this chapter. Suffice it to say that the *bhuinhárs* are supposed to be descendants of the pioneers who turned the first soil in the village. A *bhuinhárí* holding of the present day consists mainly of *don* or low land, and a small portion or *tánr* or upland. Some *bhuinhárí* land did not contain any *tánr*, but the Special Commissioners decreed a small amount of *tánr* to each

bhuinhárí holding by an arbitrary rule with the consent of landlords. The incidents of the tenures, whatever they might have been in days gone by, are as follow:—*Rent*:—The rent, if any, paid at the longest time before the passing of the Chutiá Nágpur Tenures Act of 1869, of which proof could be got. A large portion of the *bhuinhárí* land is held rent-free, and the rest on quit-rent. *Rakumats.*—No *rakumats* or cesses are due from *bhuinhárs*, excepting the Road and Public Works cesses, which are levied on *bhuinhárí* holdings at double the rate prescribed for ráyattí lands, *i.e.*, at one anna per rupee of rent. *Bet-begárí.*—A *bhuinhár* usually gives the same amount of labour towards the cultivation of the *mánjhihas* as a *chatisá* ráyat, viz., three days' ploughing, three days' digging, three days' planting, three days' cutting, and one or two days' threshing and storing the grain. Besides there is another service known as *ogrd*, which consists in every village sending one or two men to the landlord to assist him in building and thatching his house. The time for which they are bound to work varies from seven days to a month. In default of such service, the *bhuinhárs* pay from Rs. 3 to Rs. 12 per village. The Bhuinhárí Commissioners permitted all these personal services to be commuted to money payment when so desired by any *bhuinhárs*, but the opportunity was not much availed of by the class. Poor as they were, most of them preferred to give labour, and thus work off a portion of the rent rather than pay the whole demand in cash. Under the rent law, *bet-begárí*, like rent-in-kind, can be commuted to money payment on application by any of the parties concerned. *Succession and transfer.*—Formerly the *bhuinhárí* tenures were hereditary only within limited degrees of relationship; by the Act they have been made transferable by gift, sale or mortgage in the same way as any other proprietory holding. Formerly alienations of *bhuinhárí* lands were not allowed, unless to the landlord or with his consent. A *bhuinhár* leaving his village left his lands with his landlord, and he or his heirs got them back on return. This custom was liable to frequent abuse. Alienations were almost unknown. Now that transfers are permitted, the *bhuinhár* Kols are no longer debarred from transferring their holdings by open mortgage or sale, and as they are an improvident class, the best portion of *bhuinhárí* lands has in this way been lost to their original holders. The commutation of *bet-begárí* into money payment has also removed the only difficulty which had hitherto prevented *mahájans* from buying *bhuinhárí* lands.

Private *bhutkhetá* or *bhuinhárí bhutkhetá*, as it is often called, is held by *bhuinhárs*, and its proceeds are meant to defray the expenses incurred in the worship of private *bhuts* or devils as distinguished from the village *bhuts*, for whose worship the *páhánai bhutkhetás* are held by the *páhán*. *Bhuinhárí bhutkhetá* may be either rent-free or pays only quit-rent, and is subject to no other demands. It resembles in its incidents the *bramhottor* tenure of Bengal, and, like the latter and the *bhuinhárí* tenure, is inviolable so far as the zamindár is concerned.

Common rights of ráyats and zamindárs on the plateau of Chutiá Nágpur.—In concluding the description of the land tenures prevailing on the plateau of Chutiá Nágpur, a short account of the common rights of zamindárs and ráyats in respect of the various matters affecting the interest of the village may not be out of place. These have been treated below under separate heads.

Chháparbandí or rent for homestead is not levied, except in a few large villages. *Chatisá ráyats* are exempted from the rent. When a ráyat abandons his house, it is understood to be at the disposal of the zamindár; but in some of the large villages ráyats have sold their houses, and the zamindár has not interfered. It is admitted, however, that a ráyat can sell the tiles of his house, but not any woodwork or thatch, unless he has pad for it. Wood and thatching grass are usually collected free of charge in the zamindárí forests: the zamindár will not therefore let the ráyat sell them.

Settlement of vacant lands.—The right to settle vacant lands is vested in the *máháto* and *páhán* of the village, who make the arrangement and give only notice of it to the zamindár. The right to take settlement of vacant lands is vested in the following classes in order of precedence of title:—(1) resident relatives of late cultivator; (2) landless resident ráyats; (3) other resident ráyats; (4) outside ráytas; and (5) zamindár. In practice, however, the zamindár or his assignee usually settles the vacant lands with whomsoever he choses.

Korkar-making—As regards permission to make *korkar*, the ráyats are unanimous on the point that no one's leave is necessary to enable a ráyat to turn the upland of his holding into *korkar*. As regards other upland, the zamindár's leave is not needed, but that of the *máháto* and the *páhán*, the latter merely informing the zamindár of leave having been given. In *ticcádárí* villages, the leave of the ticcádár is needed.

Rights as to burial-grounds, burning-grounds, sarnas, threshing and husking-grounds and manure-pits.—All these are free of rent. Burial-grounds (*hárgárí*) and burning-grounds are common village property. Threshing-grounds and manure-pits can be made on any fallow land without the need of any one's leave, and the maker cannot be ousted so long as he requires the lands for such purposes. The *sarna* or sacred grove is the property of the *páhán*. The trees or wood of the *sarna* cannot be cut down, except by the *páhán* for religious purposes, *e.g.*, to cook the offerings. If a tree falls down through accident, it becomes the common property of the village.

Easements.—(*a*) Where the water of a stream or tank is used for irrigation, each ráyat's share and turn are regulated by the *máháto* and the *páhán*. (*b*) The ráyats have free right to twigs, leaves, and pasturage in the zamindári forests. (*c*) Resident ráyats have free right in the village forests to fuel, bamboos, thatching grass and timber for house-building or agricultural purposes. In some villages, however, a small tax is levied on each ráyat for the right of collecting such articles. A ráyat cannot cut down any large tree, nor can he cut down *kusum*, *máhuá*, *sisoo*, and in some places *sál* and such other valuable trees. Other jungle products can be collected free of charge by any resident cultivator, provided such products are taken for private use and not for purposes of trade. Lac, where *palás* and *kusum* trees are numerous, is not however free. *d*) A ráyat can dig a well in his holding without anybody's permission.

Rights as to improvements.—Koeris who own many wells for irrigation purposes often claim the following rights:—(*a*) to demand the cost of each well from a new ráyat taking such holding, and if he refuses it is asserted that the maker of the well can prevent the new ráyat from using the well; (*b*) to sell the well and its water-lifting apparatus; (*c*) to take away the water-lifting apparatus. The power to sell or take away the water-lifting apparatus is also claimed by ráyats.

Right to relinquish part of a holding.—The ráyats claim the right of relinquishing part of their holding without being obliged to relinquish the whole. This claim is, however, repudiated by the landlords.

Rights as to receipts for rents and farkattís—The ráyats have the right to obtain without extra payment a receipt for each payment of rent and a *farkattí* at the close of the year. Receipts and *farkattís* are, however, generally withheld, and where given a small fee is taken.

Tenures in the Five Parganás.—The tenures of the Five Parganás may be divided into the following classes:—(1) the tenures of the Rájás of Silí, Ráhe Bundu, Bárándá and Támár; (2) the tenures of *mánkís*, *mundás* and *khunt kattidárs*; (3) maintenance and service tenures; and (4) cultivating tenures. Each of these four classes of tenures is separately treated below.

I.—*Tenures of the Rájás.*—The Rájás of Sillí, Ráhe, Bundu, Báránda and Támár are all feudatories of the Mahárájá of Chutiá Nágpur, from whom they hold their tenures at fixed rents. The incidents of these dependent tenures have been described in detail in p. 100, to which I beg to refer.

II.—The tenures of *mankís*, *mundás* and *khunt-kattidárs*.—The Rájás hold only very small portions of their estates in their own possession. The remainder, comprising the great majority of the villages included in these estates, are permanently held by *mánkís*, *mundás* and *khunt-kattidárs*. Thus the Rájá of Támar owns some 216 villages, out of which he holds only six as *khálsá* or *khás*. The remaining villages are held by various under-tenure-holders, from whom he is entitled only to obtain fixed rents.

The *mánkís* and the *mundás* are undoubtedly the descendants of the original Chiefs, and have still possession of the villages which their ancestors founded. It is highly probable that the Rájás of the Five Parganás were to begin with *mánkís*, who had succeeded in bringing their rival *mánkís* into subjugation, and to better their social status became converted to Hinduism at an early period. In these parganás we still meet with a more or less exact counterpart of the land

tenures which must have obtained on the central plateau of Chutiá Nágpur in early times before the advent of the Hindus. A *mánkí* is the chief of a circle of 12 or more villages. Out of these he may hold one or more in his direct possession, over which he exercises the same authority as the *mundá* does in his own village. The remaining villages of his circle are held by *mundás*, from whom he is entitled to collect the fixed rents. The *mundá* is the hereditary head and owner of his village, and exercises the same powers as a zamindár. He is only liable to pay a fixed annual rent to the *mánkí*, and sometimes to the Rájá direct. The tenures of the *mánkís* and the *mundás* are subject to the same laws of inheritance as those of the Rájás. The eldest son only succeeds, the other sons being entitled to maintenance grants, called *bábuán* (*literally* share of a *bábu* or member of the leading family). No woman can inherit, and on failure of direct male issue the tenure is resumed by the superior landlord (the *mánkí* or the rájá, as the case may be). As regards increase of rent, it is now held that the tenures of the *mánkís* and the *mundás* are held at rents fixed for ever. In the early part of this century constant troubles arose from the Rájás endeavouring by force to enhance the rents payable by their under-tenure-holders, many of whom were also deprived of their villages. This aggressive conduct on the part of the Rájás finally led to the Kol rebellion of 1831. On the subsequent pacification of the country, Sir Thomas Wilkinson, the then Agent to the Governor-General for the South-West Frontier Agency, defined the rights and liabilities of the *mundás* and the *mánkís*, and compelled the Rájá of Támár and other parganás to give them *pottás* or leases confirming their titles and fixing the rates of rent payable by them for ever. It was held by him that "it is clearly ascertained that the lands in the possession of the *mánkís* and the *mundás* are hereditary clearings; that they have never paid variable rents; and that, excepting receiving rent, the zamindár has no other right or power of control."

As regards alienability, it is doubtful whether a *mundá* or a *mánkí* can alienate his village. It is held by some that as a feudal tenure-holder he cannot alienate his property. Transfers are, however, very frequently made, but are not recognized by the superior landlords until *dákhíl khárij* has been made in his books. The transferee has to pay a certain *salámí* to the zamindár to have his name registered in the rent-roll. So long as this is not done, the rent has to be paid through the original holder, and so far as the landlord is concerned, the transfer does not affect him in any way.

The tenures of *khunt-kattidárs* are only a modern version of the *mundá* tenures. In fact, the oldest among the *khunt-kátti* tenures are products of unwritten contract, and do not differ in any of its incidents from the *mundá* tenures, which are also spoken of as *khunt-kátti*, signifying that a *mundá* tenure had its origin in the clearing of *khunt* or forest land. Some *khunt-kátti* tenures are of recent origin, and have been united either by custom or by written contract. The rights of proprietorship claimed by *khunt-kattidárs* arise from the custom originally prevalent in Chutiá Nágpur Proper, that the clearer of the soil was considered the owner. The incidents of old *khunt-kátti* are believed to be the same as of *mundá* tenures. With regard to *khunt-kátti* of recent creation succession is governed by the same laws as old *khunt-kátti* and *mundá* tenures: its transferability is doubtful, and, unlike the latter, it is usually subject to enhancement of rent regulated by the spread of cultivation. The *pottá* creating a modern *khunt-kátti* aways states the rate of increase of rent up till a certain number of years when a maximum is to be reached.

III.—*Maintenance and service tenures.*—The maintenance *jágírs*, known as *khor-posh* or *bábuán*, are given by the *Rájás*, *mánkís* and *mundás* to younger members of the family, and are in every respect the same as the maintenance *jágírs* on the plateau of Chutiá Nágpur. They are subject to the payment of quit-rents. The extent of the *jágírs* of a *khor-poshdár* or *bábu* depends on the extent of the parent estate, and varies from several villages in the cases of the maintenance-holders of their Rájás to only a few acres of ráyattí land at low rents in the cases of the *bábus* of a *mundá*.

Besides the maintenance *jágírs*, the following arealso met with:—*mahátrán*, given to Bráhmans, the same as the *bhamhottar* of Bengal; *debottar*, given to Bráhmans and others in consideration of worshipping a certain god; *páhánai* lands in the possession of the village *páhán* or the priest for the time being;

and various rent-free service tenures, such as those of the *dewán* of a Rájá or *mánki* of the *házám*, *dhobí*, *bhándárí*, &c. The incidents of each of these tenures, are the same as of the corresponding tenures on the plateau of Chutiá Nágpur.

IV.—*Cultivating tenures.*—These are the *mánjhihas*, the *ráyattí*, the *korkar* or *báiballá*, and the *máswár*. The *mánjhihas* or *nij-jote* of the Five Parganás is the same as that of the plateau of Chutiá Nágpur. It may be let out in *saiká* (*vide* p. 106) or cultivated by the landlord himself. In the latter case he takes *bet-begárí* from his ráyats, which amounts to three days' ploughing and one or two days' other work. There is no fixed rule in the Five Parganás regulating the amount and nature of *begárí* due from ráyats towards the cultivation of *nij-jote*. The Rájá of Sillí takes from two villages in his own possession (the remainder of his property being under management of Government under the Encumbered Estates' Act, VI of 1876), according to his own admission, the following *bet*:—Three days' ploughing, three days' hoeing, three days' weeding and planting, three days' reaping, and three days' threshing. There are no *betkhetá* lands held by ráyats in consideration of free labour given towards the cultivation of the landlord's *nij-jote* or home farm.

Ráyattí tenure.—A ráyat's tenure includes, like the *chatisá* tenure of the Chutiá Nágpur pleateau, some *don* or low land which forms the basis of assessment, the ráyats *bárí* or homestead, and some upland. In some villages, however, *chhápparbandí* or ground-rent is separately paid, and I have seen in several villages in Támár that upland or *tánr* has been separately assessed. The liabilities of the ráyattí tenure of the Five Parganás are a consolidated rent for the entire holding, *rakumats* which vary in different estates and even in different villages of the same estate, and a variable quantity of *bet-begárí* for the cultivation of the landlord's *nij-jote*. Unlike the *chatisá* tenure, the ráyattí tenure of the Five Parganás does not carry with it the right of occupancy. After three years a ráyat claims to acquire the right of occupancy, and cannot be ousted from his holding at the will of the landlord. An occupancy ráyat cannot sell his holding. He may, however, mortgage it, the mortgagee paying the rent through him, or sublet it to *korpá* or under-ráyats.

Máswár is the same as the corresponding tenure of the same name on the plateau of Chutiá Nágpur. Upland held in excess of the complement attached to a ráyattí tenure is held as *máswár*, which is only paid during the year it is cultivated. In those villages which have been recently settled, all *tánr* lands have been excluded from ráyattí holdings and separately assessed. The rent payable for *máswár* is usually the same as the amount of seed sown (*vide* page 108). Sometimes a cash rent is paid at the rate of four annas per *kát*. *Máswár* lands are usually under temporary cultivation, and rent is paid only for those years in which they are actually under cultivation. No right of occupancy in *máswár* lands can therefore accrue.

Korkár, usually called *báibállá* (a corruption of *báhu-bala*, that is, prepared by strength of hand) in the Five Parganás, is the same as the *korkar* of the Chutá Nágpur plateau. The rent-free period is usually three years, after which half, and occasionally ten-sixteenths, of the rate of rent for ráyattí land is paid. The holder of *korkar* possesses proprietary right in his holding, subject only to payment of rent: he claims to be able to mortgage or sell the holding at his pleasure, but is often prevented from exercising this right in full. I have heard in one or two places that the landlords, with a view to destroy the proprietary right of the *korkar* holders, have included their *korkar* lands in their ráyattí holdings, and in the rent receipts no separate mention is made of the former. This practice, which is intended to conceal the rights of proprietorship acquired by a ráyat in rice-lands prepared at his own expense and labour, is, I believe, general all over the Five Parganás.

Land tenures of parganá Torí.—The following description of the land tenures of parganá Torí is reproduced from the Statistical Account of Bengal (vol. XVI.)

"The bulk of the inhabitants of the parganá of Torí are Bhogtás, and the tenures of land differ greatly from those in Khukrá and the upper part of the plateau. There are no *bhuinhárs*. The arrangement called *saiká*, is, I believe, unknown. There is no *betkhetá*, though there is *mánjhihas*; and the villagers are not liable to give the same amount of *begárí* or forced labour as

the Uráons do, so that, as a natural consequence, the rents are higher. The system prevailing is as follows:—The *don* or low rice land of the village is divided into *pátti*s each of which is supposed to contain three bighas. The actual area of the *pátti* varies from two to four bighas in different villages; but though here and there in a village some old or some powerful ráyat may be found to be enjoying a larger quantity of land than he is entitled to, as a rule the *pátti* varies less than the *páwá*. With the *pátti* is incorporated a certain quantity of *bárí* or homestead land, including the house of the cultivator and from 8 to 16 *máhuá* trees,—the whole forming the *jiban*, corresponding to the *chatisá*, on which rent is paid. In general, where the portion of *don* is fully three bighas, one bigha of *bárí* is included; if less than this, one bigha of *bárí* and one of *bhitá* or high land go to make up the *pátti*. Occasionally the *pátti* contains no *don*, but is made up entirely of *bárí* lands. In some villages the *bárí* has been regularly measured and apportioned to the ráyats; in others, a piece of land is pointed out (*ángur batá*) to the ráyats as a bigha; but in both cases any man holding more *bárí* than the quantity belonging to his *jiban* has to pay rent for the excess at the rate of Re. 1 per bigha. This is called *utakar* rent. No rent is charged for outlying *tánr* land, called *bahir chaur*, or outside the cowpath, which does not get manured, nor for new cultivation in the jungle by villagers; but outsiders are charged for *dáhá* or *júm* lands, where the jungle-burning system of tillage is resorted to, at the following rates:—1st year, called *dáhá*, Re. 1 per bigha; 2nd year, *khirki*, 8 annas per bigha; 3rd year, *murhi*, 4 annas per bigha; and subsequent years, *dhurhi*, 2 annas per bigha. These rents are also called *utakar*, a term which is locally applied to all rents which are not *jiban*. *Don* lands are never actually measured; the bigha in use for *bárí* is one having a side of 20 *lagís* or poles, each *lagí* being about nine feet. The *lagí* is commonly made by measuring five cubits from the elbow to the end of the middle finger, and one from the elbow to the tip of the closed fist. Rents vary from Rs. 6 to Rs. 12 per *pattí*, but Rs. 8 is the standard rate. In addition to the money-rent, there are many *negís* or cesses rated per house, so that the rate per *pattí* falls heavily on a man holding a small amount of land. The commonest are—one *kach* seer of máhuá oil per house; 1 seer of hariá, a sort of bamboo pickle; *birni* or bamboo broom for sweeping the *bhandár* or granary; 1 seer of cotton; and 1 seer of ghee per *pattí*. Very few ráyats have a right of occupancy; and it is only within the last few years that even those who are legally entitled to it have made the claim. The Bhogtás are a migratory race; and the proprietors, in order, apparently, to prevent the accrual of any right of occupancy, move the ráyats from one plot of land to another. Rents have been raised in all villages within the last few years, and are much higher than in Chutiá Nágpur Proper. All kusúm trees belong to the zamindár, who takes a rent of from 4 to 8 annas per tree, for the liberty of cultivating lac on them. Low rice land, which the cultivator has prepared himself, is generally left in his possession, unless he was a lessee of the village at the time, and then he is often dispossessed on the lease being taken from him. No special advantages are allowed to the reclaimer of land. If he is allotted the proper share of máhuá trees and *bárí*, which fairly belongs to the land he has terraced, he pays the usual *jiban* rents; but till this is done, he pays somewhat lower than this, and no *negis* or cesses. He is generally allowed to hold it free for three years, then at half *jiban* rates for three years, at the end of which period he is liable to pay full rates. Occasionally another plan is adopted: Re. 1 per *pattí* is charged the first year, Rs. 2 for the second, and so on till the full rate is reached."

CHAPTER V.—Communications.

Rivers, canals and railways.—None of the rivers of Chutiá Nágpur Proper are navigable. They serve the purpose of mere drainage channels, and the largest among them are either too shallow or too hilly to allow of navigation.

There are no railways or canals in the sub-division. The nearest railway station is Puruliá on the Bengal-Nágpur Railway, 72 miles from Ránchí, and Giridhí, 128 miles from Ránchí, the terminus of the Karharbarí branch of the East Indian Railway. The proposed Benares-Cuttack Railway, if accomplished, will probably skirt the northern edge of the Chutiá Nágpur plateau, and pass

through Rámgarh in the Dámodar valley, 28 miles from Ránchí. The steep angle at which the plateau rises above the low country to the north, east, and south presents an engineering difficulty in the way of railway construction in Chutiá Nágpur. The export and import trade of the sub-division is not, besides, of sufficient importance to warrant the construction of a railway at excessive cost. The late Commissioner of Chutiá Nágpur, Mr. C. C. Stevens, proposed to connect Ránchí with the Bengal-Nágpur Railway at Puruliá by means of a light steam tramway, which can be laid down on the existing Public Works road at comparatively small cost, and tried to persuade an English firm to take it up. The proposal has, so far as I am aware, not yet been dropped. A steam tramway may pay its own way, its proceeds mainly arising from the brisk traffic of emigrants from Chutiá Nágpur. It appears to me very doubtful whether a railway in Chutiá Nágpur can ever be a profitable concern; there is, indeed, some export and import trade with Bengal and Behar, but its magnitude is not sufficiently large to give full work to a railway. The Benares-Cuttack Railway, passing through Palámau and skirting the plateau along the valley of the Dámodar, is likely to be very useful by tapping the coal-fields of the former and intercepting the trade between Chutiá Nágpur on the one hand, and Bengal and Behar on the other.

The hilly and undulating nature of the country precludes the possibility of canal or river navigation.

Roads.—The following table shows the name, situation, and mileage of the existing roads and country tracks of the sub-division. The roads under the management of the Public Works Department and those under the control of the District Road Committee are distinguished into the following five classes:—

I.—Roads above high flood level, metalled and bridged, or having ferries.

II.—The same, but unmetalled.

III.—The same, but with temporary bridges.

IV.—Low level roads—above ordinary and under ordinary high flood level.

V.—Surface tracks.

Roads under the Public Works Department.

Number of road.	From	To	Length in miles.	Class.	REMARKS.
1	Doranda (Ránchi).	Ormánjhi (Házáribágh boundary).	18	I	This is the high road from Ránchi to Házáribágh, and is called the Házáribágh road. A few carts ply on this road between Giridi on the East Indian Railway and Ránchi through Házáribágh. It will soon lose its importance on the opening of the Bengal-Nágpur Railway, as the import trade from Calcutta will be diverted to the Puruliá road.
2	Ditto ..	Boundary of Singbhum.	34	I	This road passes through Háttiá and Khunti, two considerable villages south of Ránchi, and leads through Chakradharpur on the Bengal-Nágpur Railway to Chaibassá. It was all along under local management, but has been recently made over to the Public Works Department. This road is important as a timber route, and will be a feeder road of the Bengal-Nágpur Railway. This road is spoken of as the Chaibassá road.
3	Ránchi ...	Tulin on the Subarnarekhá on the Mánbhum boundary.	39	I	The road passes through Jonhá and Silli east of Ránchi, and leads to Tulin, Jháldá and Puruliá. In 1872 it was made over to the Public Works Department. This road has always been important as the only highway between Lohárdágá and the districts of Bengal and Calcutta. It is being metalled and bridged all over in view of the opening of the Bengal-Nágpur Railway, of which it will be a principal feeder. A large numbe of Bengali carts ply on this road between Raneegunge, Bánkurá, Barákur, Sitárámpur, Purulliá and Jháldá on the one hand, and Ránchi and Lohárdágá on the other. It is also the great route for emigrants to Bengal and Assam. This road is spoken of as the Puruliá road.

Roads under the District Road Committee.

Number of road.	From	To	Length in miles.	Class.	REMARKS.
4	Ránchi (Lálpur).	Házáribágh road...	1¼	I	One of the Ránchi station road.
5	Ránchi (Government offices).	Ditto ...	2¼	II	Ditto ditto.
6	Ránchi ...	Buti (on the Házáribágh road).	5¼	II	Ditto ditto.

Roads under the District Road Committee—concluded.

Number of road.	From	To	Length in miles.	Class.	REMARKS.
7	Ránchi ..	Lohárdágá ...	43¼	II	This is the most important of the local roads. Carts from Bengal are often found on this road, bringing salt, cloth, kerosine oil, &c., to Lohárdágá town, and taking away pulse and oilseeds, a little wheat and barley. The first portion of the road from Ránchi to Kuru (34 miles) is also the highway between Ránchi and Palámau and Behar. There is, however, very little cart traffic between the sub-division and Palámau and Behar. The road is gravelled in some places, and should be metalled in preference to the construction of new local roads.
8	Ánandi (Házáribágh road).	Boundary of the sub-division towards Golá in Házáribágh.	10½	II	This road is not yet of much importance, but in case of the passing of the Benares-Cuttack Railway through Golá in the Dámodar valley, it will be a principal feeder of the Railway.
9	Lohárdágá .	Boundary of Házáribágh towards Chátrá.	37½	III	This road passes through Chándwá and Bálumut, crossing the Ránchi-Daltongunge road *via* Kuru at Chándwá. It is spoken of as the Chándwá road, and is largely availed by pack-bullocks plying between Lohárdágá, Chátrá, Palámau, and Behar. It is difficult in many places, especially to the east of Bálumat, and should be improved by easing the gradients.
10	Ránchi .	Mánbhum, boundary towards Chándil.	38	III	This road passes through Rámpur and Palándu tea garden, Bundu, and within three or four miles of Támár, towards Chándil, a considerable trading place in Mánbhum and a station on the Bengal Nágpur Railway. This station will be the nearest to Ránchi, and will catch the export trade of the eastern and southern Parganás. It is yet incomplete, only 31 miles from Ránchi being a fair-weather road. It is spoken of as the Chándil Bundu road.
11	Ránchi ..	Lohárdágá *viâ* Palmá and Beyro	43½	III	This is a second road from Ránchi to Lohárdágá, and is not of much importance as a trade route. It passes through Nagri, a considerable village 10 miles west of Ránchi, and is passed by a few carts from Bengal.
12	Ránchi ..	Pithauriá .	10	III	This road was once the highway between Ránchi and Házáribágh, but on the opening of the new Házáribágh road (No. 1) has fallen into disuse as a route for external trade.
13	Ránchi ..	Pálkot .	65	III	This road passes through Kárrá, Lodhná, Bassiá, and leads to Pálkot, a large village to the south-west of Ranchi. It is frequented by many pack-bullocks but no carts.
14	Khunti ..	Kámderá ...	29½	III	This road passes through Torpá to Kámderá on the Pálkot road. Is not of any importance.
15	Lohárdágá .	Boundary of the sub-division towards Sumbulpur.	95	III	Only 29 miles from Lohárdágá properly made, the remainder is only surface track. It passes through Pálkot, Biru, Kochedegá. It is proposed to complete this road in a few years. It may be useful in famine times as serving to bring food grains from Gángpur and Sambulpur.
16	Bundu ..	Boundary of this district towards Jhálda in Mánbhum.	20	III	Only eight miles from Bundu properly made, the rest mere surface track. It is an important route, and should be completed as soon as possible. It takes away lac, timber, various jungle products, such as *kartaks*, tamarind, &c., hides, &c., from Bundu and Támár to Jhaldá a trading town in Mánbhum. This trade at present entirely escapes registration. A registering station should be established where this road enters the Mánbhum district.
17	Kurru ..	Aurangá river on the boundary between the Sudder and Palámau sub-divisions.	20	III	It passes through Chándwá and crosses the Lohárdágá Chátrá road there. Is of great importance as a highway between Ránchi on the one hand and Palámau and Behar and the northern part of Házáribágh on the other. Is largely frequented by pack bullocks, and also by a few carts from Daltongunge, Gárwá in Palámau, and Sherghotty, Imamgunge, Sahebgunge, &c., in Behar. It should be improved by bridging and metalling.
18	Balumat ...	Janju ...	38	V	Surface track leading to Pánki in Palámau, extremely difficult of passage.
19	Bassiá ...	Tingniá ...	30	V	Surface track.
20	Pálkot ...	Gomlá .	16	V	This track is important, connecting Pálkot, a large trading village, with Gomlá, one of the biggest markets in the sub-division. The road ought to be made as soon as practicable.
21	Bhándrá	Korámbe ..	10	V	
22	Korámbe	Lohárdágá ...	8	V	
23	Pithauriá .	Opá (on the Lohárdágá road).	22	V	
24	Choreá ...	Bálumat ..	28	V	
25	Bundu	Silli .	24	V	

All these roads, with the exception of Nos. 1 to 7, are fair-weather roads. Being unbridged in places, they become impassable at times during the rainy season by floods in the numerous streams over which they pass. Communication during the rains is thus rendered very precarious. It is not an uncommon occurrence for the mail to be delayed for days together by a sudden freshet in a river.

Out of these roads, only a few are frequented by carts. Very little traffic is to be seen on the remaining roads, although most of them are kept in fairly good order. I have passed over many of these roads without seeing a single man or pack-bullock—not to speak of carts—for miles together. The truth is none of them serve the purpose of highways. The petty tradesmen trudge with their bullocks along footpaths from village to village, buying and selling as they go. With the exception of Ránchí, Lohárdágá, Pálkot, Bundu, and one or two other places, there are no large trade centres in the sub-division, and consequently there could be no fixed routes of communication.

The absence of large marts account for the restricted use of carts as a means of conveyance. Bullock carts could not be profitably employed when the goods have to be brought or sold in parcels.

The main lines of external communication are the following:—

(1) The road from Ránchí to Puruliá leading to Bengal *viá* Jonhá
(2) The road from Ránchí to Házáribágh *viá* Chota Pálu.
(3) The road from Ránchí to Chybassá.
(4) The road from Lohárdagá to Chátrá; and
(5) The road from Ránchí to Daltongunge leading to Behar.

Of these the first three are now under the management of the Public Works Department, and are in course of being metalled, and their gradients made easier. The road to Daltongunge is only a fair-weather road which remains blocked up by floods for many days during the monsoon. It serves as the highway of trade between Chátrá in the north of Házáribágh, Behar and Palámau on one side, and Chutiá Nágpur on the other. The passage of carts is rendered very difficult by steep gradients at river crossings. This road should be bridged and metalled, at least gravelled, in preference to all the rest. This is particularly important, as in case of a famine in Palámau and Behar, a large portion of the importations is drawn from Chutiá Nágpur, the whole of which must pass along this road.

The Sambalpur road (No. 15) is also important. It remains yet incomplete. The line, I understood, is being carried onward by a few miles every year, and will be completed in a few years more. During the Palámau famine of 1874, large importations took place from Gángpur, Sambalpur, and the country in the south-west.

As regards the extension and improvement of road communication, I believe that the Road Cess Fund would be much more profitably employed on repairs and improvement of existing roads than in the construction of new ones. One or two roads have, indeed, to be made, as I have already mentioned. Leaving these aside, the District Committee should confine their attention for some years to come to the improvement of existing roads by metalling or gravelling and bridging. Considering that many of the roads already made are left without any traffic, it would be squandering public money to lay out any more new roads. The diversion of a large portion of the Road Fund to the construction of new roads causes the existing ones to fall into neglect; on the other hand, if more money were allotted to road improvement, the present fair-weather roads would be bridged, metalled, or at least gravelled, and rendered passable by carts at all times of the year. The total income of the District Committee is slightly above Rs. 50,000, out of which only Rs. 36,000 is available for purposes of road-making and repairing. This sum is barely enough to keep in decent repair the one thousand miles of road now existing in the district.

CHAPTER VI.—Trade and Commerce.

A brief survey of the internal trade of the sub-division.—I will first of all describe the media through which the trade of the sub-division is carried on. In some of the larger villages of the sub-division, the most important among which are Lohárdagá, Ránchí, and Pálkot, are found a class of rich merchants or *mahájans* who deal in articles both of export and import. These *mahájans* keep *golás* or warehouses where two distinct kinds of business are usually carried on. In the first place they serve as the seats of exchange between those *bepáris* or petty travelling dealers who want to buy, and those who want to sell. The *mahájan's* profit consists in levying a certain percentage as broker's fee on the value of the goods sold. With a view to encourage this kind of business, he is in the habit of making advances to his regular clients. In the second place, whenever he sees the price of any commodity sufficiently low, he buys in a quantity of it and lays it by till such time as he can profitably dispose of it either by selling it to local *bepáries* or by consigning it to his agents abroad. The rich *mahájan* is also an import merchant of foreign goods such as European piece-goods and twist, salt, *gur* and refined sugar, tobacco, wheat and barley, blankets and brass utensils. These he disposes of to petty dealers, who take them on pack-bullocks and retail them in the numerous weekly and bi-weekly

markets held all over the country. Among this class of rich *mahájans*, a few are *Márwáris*, a Baisya caste from Rájputáná, distinguished for their wealth and business abilities. A good many of them are found at Ránchí, and a few scattered all over the country.

Besides the rich class of merchants above spoken of, almost every large village has one or more *mahájans*. They are, one and all, professional money and grain lenders (*sáhus*), besides being dealers in all kinds of native and foreign produce. Each of them owns a number of pack-bullocks, by which he exports country produce to a distance where better prices are available, and import foreign produce from the *golás* of the richer merchants for sale in his neighbourhood. Very often he keeps a shop in which he retails the common necessaries of life of both native and foreign origin. A favourite method of buying country produce, and especially such articles as *ghee*, cotton, cocoons, &c., is the *dádani* system, according to which the producer, in consideration of a cash advance, binds himself to deliver his produce at a rate lower than the prevailing market rate.

The class of petty travelling tradesmen has been already noticed. They travel from village to village, buying various agricultural and other indigenous produce directly from the ráyats, and retailing to them wares of foreign manufacture These latter he buys from the import merchants at Ránchí, Lohárdagá, Pálkot, and one or two other such places. He visits in turn the weekly and bi-weekly markets of his neighbourhood, where he sets up his travelling shops and retails wares to the country people. Weekly and bi-weekly markets are pretty numerous in the sub-division. I can find nothing on record to show the number of markets in the sub-division, but I believe there are between two and three hundred of them in the country. Most of these are weekly, that is, held once a week; the largest among them are bi-weekly, that is, held twice a week; but the latter are very few. In a *hát*, all the common requirements of the people are exposed for sale. On the one side we see a number of Kol women retailing rice, millets, pulse, oilseeds, and other farm produce to such of the country people as want it, or to *bepáries* who buy it in small quantities for sale in dearer places; on another side may be seen a small group of Koeri men and women selling the vegetables of the season. The oilman and the potter, the brazier and the smith, the leather-dealer and the basket-maker, have each his place assigned in the market-place, where he exposes his respective wares for retail. In small open huts, erected at intervals in the market-place, sit the *bániyás* or petty retail traders, spreading out a most embarassing collection of spices and drugs, sugar and *gur*, candles, needles and thread, foreign dyes, in fact all such little things as are in daily want. No *hát* is complete without its complement of *bepáries* who have come up with their pack-bullocks, and are either retailing such foreign articles as salt, cloth and twist, or are moving about buying all manner of country produce for export.

Exports and Imports.—The principal articles of export are:—Rice from the town of Lohárdagá as centre to Palámau, Sherghotty, Imámgunj, and Sáhibgunj in Gayá, and to Chátrá in Házáribágh; oilseeds, hides, lac and tea to Bengal through Ráneegunj and Bánkurá. Besides these, tussur cocoons, catechu, timber and various jungle products, such as tamarind, *haritaki* (one of the so-called myrobolans of commerce, the fruits of *Terminalia chebula*) are exported in small quantities to Bengal. The principal articles of import are:—Wheat, tobacco, sugar and *gur* from Behar, and salt, European piece-goods and twist from Ráneeganj and Bánkurá in Bengal. Besides these, gram, *khesári*, *máhuá* and *ghee* from Palámau, blankets from Gayá, brass utensils from Mirzápur, and grocery, kerosine oil and various petty wares of English and Calcutta manufacture are imported in small quantities. Details of each of the principal articles of export and import will be given later on.

Trustworthy statistics of the export and import trade of Chutiá Nágpur Proper are not available. Before the year 1887-88, trade registration in the sub division was unknown. In that year four registering circles were established:—(1) Lohárdagá town in the west, the largest produce mart of the sub division; (2) Sillí, on the Puruliá road, through which the bulk of the trade with Bengal must pass; (3) Bálumat on the Chátrá Road, intercepting the whole of the trade with Chátrá and the north of Házáribágh; and (4) Boormoo, a village and outpost in the police circle of Mundár, through which a portion of

the trade with Házáribágh and Behar passes. The registration was carried on by police officers in the year 1887-88 in only three out of the four stations, the most important of which (Sillí), however, was left out. There was absolutely no check or supervision of the work; and the statistics which were collected cannot be at all depended upon. Although extremely inaccurate, they are the only ones available, and are therefore reproduced below in a slightly altered form from the Divisional Annual Report for the year:—

Statement of Exports and Imports from the Chutiá Nágpur Sub-division for the year 1888-89.

Name of Article.	Exports.					Imports.				
	Lohárdagá.	Bálumat.	Sillí.	Boormoo.	Total export.	Lohárdagá.	Bálumat.	Sillí.	Boormoo.	Total import.
	Mds.	Mds.	Mds.	Mds.	Mds.	Mds.	Mds.	Mds.	Mds.	Mds.
1. Rice	1,75,000	35,000	...	4,246	2,14,246	1,00,000	...	...	...	1,00,000
2. Pulse	...	100	...	52	152	2,000	...	...	12	2,012
3. Wheat	...	200	...	...	200	1,000	...	...	8	1,008
4. Barley	...	...	...	...	...		...	...	...	...
5. Sarguzá	1,00,000	6,000	...	124	1,06,124	...	...	...	...	...
6. Til	20,000	1,000	...	484	21,484	5,000	...	...	...	...
7. Mustard	50,000	800	...	112	50,912	2,00,000?	...	...	...	2,00,000?
8. Castor seed	...	75	...	...	75	...	...	...	...	...
9. Ghee	...	200	...	...	200	2,00,000?	...	...	...	2,00,000?
10. Máhuá	...	...	...	88	88	1,000	...	...	2,490	3,490
11. Salt	...	...	...	...	...	8,000	10,000	...	37	18,037
12. Tobacco	...	...	...	...	...	1,00,000?	5,000	...	2,380	1,07,380?
13. Hides	20,000	2,000	...	...	22,000	...	...	...	...	...
14. Lac	10,000	600	...	20	10,620	...	...	...	...	...
15. Catechu	...	200	...	...	200	...	...	...	...	...
16. Cocoons	..	300	...	110	410	...	...	...	...	...
	Pieces.				Pieces.	Pieces.	Pieces.	...	Pieces.	Pieces.
17. Cloth	7,000	...	...	...	7,000	60,100	10,000	...	1,100	71,100
						Mds.	Mds.		Mds.	Mds.
18. Blankets	...	...	...	...	...	2,000	21,000	...	1,200	5,200
19. Sugar	...	...	...	...	...	20,000	300	...	76	20,376
20. Brass utensils ...	...	...	...	...	...	5,000	400	...	...	5,400

As to the accuracy of the above figures, it is sufficient for me to quote an extract from the Chutiá Nágpur Annual Report for the year 1887-88, in which the Commissioner, Mr. Stevens, remarks regarding them as follows:—

"Internal evidences, as in the cases noticed below, show that too much reliance cannot be placed on these figures ..... Comparing these two statements (exports and imports), it appears that in one registering circle—Lohárdagá—the incredibly large quantity of two lakhs maunds of ghee and two lakhs maunds of mustard were imported during the year, and that out of the former not a single maund was again passed out, while out of the latter only 50,000 maunds were re-exported. The accuracy of the figures seems entirely doubtful."

Besides, it is not clear whether the 1,00,000 maunds of rice imported into the registering circle Lohárdagá was import in the proper sense of the term, that is, whether it came from places outside or within the limits of the sub-division. If it came from the country around Lohárdagá, which is quite probable, it ought not to be shown as import at all; such, however, I am afraid, has been the case with the import shown under Lohárdagá, and it seems to me that when a registering station is situated in the very heart of a country, such as Lohárdagá is in regard to the sub-division, there is great danger of many articles produced in the country being included under imports. This danger can only be avoided if sufficient care is taken by the registering officers to distinguish in every case articles of foreign from those of native origin, and show only the former under imports. Such a degree of care cannot in ordinary circumstances be expected from subordinate officers of the Police Service.

It seems to me also possible that a portion of the 35,000 maunds of rice exported *viâ* Bálumat was only a part of the 1,00,000 maunds exported from Lohárdagá. Bálumat lies on the way from Lohárdagá to Házáribágh and Behar. A considerable part of the 1,00,000 maunds must have therefore passed through Bálumat, and might have been registered once over. The danger of double registration should be guarded against.

The results of the trade registration of last year may show a great improvement in those of the previous year; these are, however, not yet to hand. The number of registering stations should be multiplied. Besides Sillí and the three stations at which trade was registered during 1887-88, I beg to recommend the establishment of one station on each of the following roads, at or near the point where it passes out of the sub-division:—(1) Daltongunge road, at or to the north of Chándwá; (2) Bundu-Jháldá road, to intercept the export trade of lac, timber,

and various other country produce; (3) Lohárdága-Sambálpur road. I understand the usual difficulty in such matters is to get an officer to do the work for no remuneration; the duty naturally falls on the police officers, and no station can be got up unless there is a police-station or outpost close by.

Leaving aside the figures supplied by the admittedly imperfect registration of 1887-88, I pass on to a consideration of the nature of the export and import of the principal articles of trade in the sub-division.

Rice.—Rice is exported to Sherghotty, Imámgunj, Sáhebgunj, and other towns in Gayá, to Chátrá in Házáribagh, and to all parts of Palámau. The bulk of the export finds its way to Chátrá; a portion of it is then passed on to Behar. If we are to accept the figures given above as at all accurate, we find that a net exportation of 1,14,246 maunds took place in 1887-88. The actual quantity of rice exported from the sub-division cannot be much higher than the above figure. During the famine of 1874, when the exportation of rice from Lohárdagá was encouraged to an unusual degree by the high prices of food-grains in Palámau and Behar, the total exportation of rice from the sub-division in the month of May, when the activity of the export trade was admitted to be at the highest, was only 13,900 maunds (*vide* Fortnightly Narratives of the Famine of 1873-74). Under ordinary circumstances, the average exportation of rice would not, I believe, exceed 10,000 maunds in a month, or 1,20,000 maunds in a year. Under the influence of high prices in Palámau, Házáribágh, and Behar, the quantity can be increased by 50 per cent.

The value of the export trade in rice from Chutiá Nágpur Proper has been always greatly exaggerated. The exportation of a lakh or two maunds of rice from a country covering nearly 8,000 square miles is practically of little significance. Taking the population of the sub-division to be 1,124,422, and the average food consumption per head to be two-thirds of a seer per diem, or roughly 6 maunds of cleaned grain, the total food requirement of the country is 6,746,532 maunds, almost nine-tenths of which must be rice. The total exportation of rice from the sub-division, taking it at one and-a-half lakhs of maunds at the outside, cannot be more than two and-a-half per cent. on the total quantity of food required for the people of the country. The actual percentage is very likely to fall far short of two and-a-half.

The fact that rice is exported from Chutiá Nágpur Proper does not contradict or modify the statement I have previously made regarding the food-supply of ráyats. The export does not represent the surplus of food after the ráyats have had what is necessary for their keep, but is actually the quantity of rice which they are obliged to part with in order to meet rent and buy the necessaries of life other than food. I have made many enquiries regarding the causes which induce ráyats to sell portion of their produce, and have in very few cases been told that they sold because they had more than enough for themselves. I think there cannot be a greater mistake in dealing with questions of economy than to suppose that the existence of an export trade of food-grains in a country implies in itself the existence of a corresponding surplus of food. In that case the people of Behar must be considered as having a superfluous stock of food, Behar being one of the chief cereal exporting provinces in India; but unfortunately the Beharies enjoy the unenviable reputation of being poor and ill-fed. Clothing, salt and a few such things are just as necessary to the life of a peasant as food itself; the ráyat must therefore sell part of his stock to provide for these articles and rent; and the merchant who buys, finds it more profitable to export it to places where he can get better prices than to keep it for sale in the country. Let us look at it from a different economical point of view: we want various necessaries of life which are not produced in the country, but come from outside. We must part with portion of our food-stock, which is practically the only article we possess, in exchange for the articles we want; or, what is virtually the same thing, we sell food, and with the money thus obtained buy our necessaries. Rent is also a potent cause of exportation. The landlord wants now-a-days to be paid in cash, as he has to spend the larger portion of his income, not on buying country produce, but in buying things of luxury for which cash price has to be paid. In olden times rent used to be paid mainly in kind, as the zemindar did not put much value on things of foreign origin, but thought himself rich and happy if he had plenty of what was available in his country.

Pulse.—The trade in pulse is not important. *Urid* pulse is exported to Bengal by cartmen from Ráneegunj and Bánkurá.

Wheat and barley.—All the wheat and barley imported into the sub-division comes from Palámau.

Oilseeds.—These are *sarguzá*, *til* (sesamum), and mustard. The whole of the exported oilseeds goes to Ráneegunj and Bánkurá, and ultimately to Calcutta. This trade is growing in importance with the gradual development of communications.

Ghee.—The figure for *ghee* in the trade statistics given above is wholly incorrect. There is very little export or import trade in *ghee*. Some *ghee* comes indeed from Palámau to Ránchí; but its quantity is too little to deserve mention. Very little of this article is made in the Central Parganás, where there is little or no forest. These parts are supplied with *ghee* from Biru, Bassiá and the jungly parganás in the west and south-west, where there is a large amount of jungle pasture available for cattle. It is often bought by petty tradesmen from the *áhirs* or golás under the *dádaní* system. The advances are given in April and May, and the *ghee* contracted for is delivered in the rainy season when the buffaloes are at the height of their flow.

Salt.—Salt comes into the sub-division from three directions, from Bánkurá and Ráneeganj in Bengal, from Gángpur and Sambalpur on the Orissa side, and from Chátrá. The bulk of the import comes from the Bengal side. The salt from Orissa supplies Biru in the south-west, and is extremely dirty and coarse-grained. The quantity of salt exported during 1887-88 is shown to be 18,037 maunds. This is too small for a population of 1,124,122 souls, who would require at least three seers of salt per annum per head, or 84,332 maunds altogether. A much larger quantity than 18,037 maunds could have been shown if the registering circle of Sillí had done its work, as the whole of the import from Bengal passes through this circle.

Tobacco.—All the tobacco imported comes from Behar and is sold as Tirhut tobacco. The Tirhut leaf is much superior to that grown in the country.

Hides.—The whole export goes to Calcutta. The trade is practically the monopoly of a Mahommedan hide merchant of Ránchí.

Lac.—Lac is exported in two forms—as stick-lac and as shell-lac. Stick-lac is exported from the eastern and southern parganás to Jháldá in Mánbhum; but the largest portion of the stick-lac imported from Chutiá Nágpur Proper goes *viá* Sitárámpur or Ráneegunj by the East Indian Railway to the large lac factory of Messrs. Jardine, Skinner and Company of Mirzápur. Shell-lac is exported to Calcutta from Bundu and Ránchí.

European piece-goods and twist.—These are all imported from Calcutta *viá* Rániganj. This trade may be said to be increasing every year (*vide* my remarks on clothing page 18).

Markets and Fairs.—I have already noticed the existence of numerous markets in Chutiá Nágpur Proper. The important among them are:—Ránchí, Lohárdagá, Pálkot, Gomlá, Bundu, Támár, Sillí, Rámpur, Khuntí, Háttiá, Nagrí, Opá, Kurru, Choreá, Chándwá, Bálumat, Pithauriá, Thákurgáon, Máranggádá, Bassiá, Kolebirá, Tánrwá, Biru, Bhárno, Jámodág, Sarjumdih, Ráho, Bántá, Lodhmá, Torpá, Kámderá. Of fairs, properly speaking, there are none. A few years ago, there used to be held every year a large fair at Ránchí (known usually as the Chutiá Fair), in which elephants, horses, cattle, brass and copper utensils, and valuable articles of foreign manufacture were brought by merchants from various districts. Petty fairs, are, however, numerous in the country. They are held at the religious festivals of Hindus and Kols, and are known as *játrás*. The people that come to these fairs dance and sing all day and night. At the same time there may be a few shops where brass utensils, umbrellas, and all manner of fancy things and sweets are sold. As a commercial centre none of the fairs are of any importance whatever.

Trade in fish.—Fish is very scarce in the sub-division. The only fishes available are *mugri* (Beng., mágur), *ponthá* (Beng., sarpunti), *ponthi* (Beng., punti), *chilá* (Beng., idem), *pábdá* (Beng., idem), *shol* (Beng., idem), *garai* and *láthá* (Beng., chang), *chingri* (Beng., idem), *getu* and *boal* (Beng., idem). In the cold weather small quantities of the larger fishes (*rohi*, *kátlá*, and *mrigal*) are brought to Ránchí from Jháldá in Mánbhum, and from the Dámodar at

Rámgurh and Golá in Házaríbágh by fishermen, and sold at four to five annas per seer. The supply is, however, confined to Ránchí and is very scanty. Fish-breeding is unknown in Chutiá Nágpur; but at Sillí and one or two places in the Five Parganás, I have seen a few tanks where the larger fishes are reared.

CHAPTER VII.—Manufactures, Arts and Industries.

The following extract from the "Statistical Account of Lohárdagá" (pages 415 and 416) will show the nature and kinds of manufacture of the subdivision:—"Lohárdagá district is conspicuous for its poverty in manufactures of importance. Inferior articles of brass and iron work, coarse cloth, rough blankets, mats, baskets, rope, and rude pottery utensils, are the only manufactured products of the district. Until about ten years ago all brass utensils were made by the process of moulding, as the braziers had not learnt how to beat the metal into the required shape; and even now the local demand for brass utensils is met to a great extent by importation from abroad.* The pottery ware is thick, inelegant in shape, and wanting in durability. It is generally glazed with a mixture of *sáji máti* (Fuller's earth), catechu and *kábish*, a sort of red ochre. A strong cotton cloth called *dosuti* is woven in the district; but the supply of it has not been at present brought up to the demand.† Most of this cloth is woven by the Jolábás, or Mahommedan weaving class. Useful mats, which white-ants will not eat, are made by Uráon women from the leaves of date-palm‡ (*Fœnix sylvestris*), which grows abundantly in most parts of the district. These sell at two annas for a strip six feet long by three broad. Hemp and aloe fibres§ are worked up into rope, but the rope is roughly made and there is no great demand for it." With the exception of braziers, who earn from 8 annas to 12 annas per diem, the manufacturing classes can only get a little more than the wages of unskilled labour by following their respective professions.

* Mirzápur and Bánkurá. The number of braziers in the subdivision is small. About a dozen families are located at Lohárdagá, one or two at Háttiá, and a few families at Bundu. The Kaser ás of Bundu are Bengalis: their ancestors came from Berhampur. They make inferior *pitáo* articles, such as *thális* or plates, *kátorás* or cups, &c. The Kaserás of Lohárdagá and Háttiá make only moulded vessels, such as water-vessels (*lotás*), tumblers of various shapes, *gorgorás* or smoking vessels, and brass ornaments. B. C. B.

† The *dosuti* is the same stuff as is worn by the ráyats under the name of *barki*, *kareya*, &c. B. C. B.

‡ In page 216 of the "Statistical Account of Bengal," volume XVI, it is said that the mats are made from the leaves of the *tár* or toddy palm, which is said to be numerous. This is incorrect. There are practically speaking no *tár* trees to be found in Chutiá Nágpur Proper. B. C. B.

§ Kudrum and chop fibres are also made into rope. B. C. B.

Besides the industries of purely indigenous growth, there are two other industries of foreign origin which have been firmly established in the subdivision. These are the manufactures of shell-lac and tea. The rearing of *tasar* cocoons is a rural industry in parts of the Five Parganás. A brief notice of each is given below.

Shell-lac.—There are seven lac factories in Chutiá Nágpur Proper—one at Ránchí belonging to an English firm, five at Bundu, and one at Árki in Támár. The last six are owned and managed by natives of Sonámukhí, a town in Bán kurá. The breeding of the lac-worm and collection of stick-lac are a source of considerable profit to the people of the Five Parganás and the jungly parganás to the south, west and south-west of the sub-division. Almost every ráyat of these parts has himself or hires a few *Kusum* (*Schleicheria trijuga*) and *Palás* (*Butea frondosa*) trees, on which he breeds the insect (*Coccus lacca*) some gather wild stick-lac in the jungles; others again act as middlemen. Besides, some five or six hundred workmen are engaged in the manufacture of shell-lac. The workmen of Bundu are one and all people from Sonámukhí, where they received their first training in the various processes of the manufacture.

There are two different varieties of lac, viz. (1) *rangin* or *palási*, grown on the *palás* and so called from its containing a large proportion of the lac-dye. Shell-lac made from *rañgin* looks much darker than that from *kusumí*, which is translucent and of a beautiful golden yellow color; and (2) *kusumí*, grown on the *kusum* above spoken of. Lac grown on *bacr* (*Zizyphus jujuba*) and *pipar* (*Ficus religiosa*) is classed with *kusumí*. Regarding the life history of the lac

insect, and the process of manufacture of shell-lac, I beg to refer to pages 416 to 420 of volume XVI of the Statistical Account of Bengal.

The statistics of lac manufacture during the year 1887-88 are as follows:—

Number of factories	7
„ of persons employed (exclusive of the factory at Ránchí)	123
Capital of the six factories	Rs. 7,400
Outturn of the six ditto	Mds. 2,226
Its value	Rs. 50,641

The large lac factory of Ránchí did not supply any figures.

The industry is in its decadence owing to the great fall in price of shell-lac and the extinction of the manufacture of lac-dye, which has been completely replaced by aniline dyes. The dye washings are now thrown away.

Tea.—The statistics of tea grown in Chutiá Nágpur during the year 1887-88 are as follow:—

Number of gardens	30
Acreage under mature plants	1,969½
„ „ immature „	1,114
„ not yet planted	2,115
Total yield during 1887-88	4,36,940lbs.

The yield of tea per acre of the gardens varies from 80 to 360lbs. The largest tea-garden, that of Palándu, belongs to the Chutiá Nágpur Tea Company, Ld. It had in 1887-88 a total acreage of 612½ acres, of which 180 acres were under mature and 25 acres under immature plants. The total tea made on this garden during the year was 62,847lbs., which represents a yield of 349lbs. per acre of mature plants.

So far as I have been able to gather from enquiry, the prospect of tea in Chutiá Nágpur Proper is very doubtful. The highest yield recorded is 360lbs. per acre, which is about half the yield obtained in Assam and Darjeeling. In Chutiá Nágpur more than seven or eight flushes cannot be obtained, while in Assam and Darjeeling as many as twelve are the rule. The great difficulty in the way of a full yield is the dry hot weather which prevails during certain months of the year, during which the growth of the plants is entirely stopped. The gardens are situated on the crests and sides of ridges, and are not therefore capable of cheap irrigation. The red sandy loam of the sub-division which prevails in the uplands of the sub-division, and an analysis of which has been given in page 38, is not well suited to the successful growth of tea. Artificial manuring with bone-meal, saltpetre, and soda is, however, often resorted to by the planters to force the growth of the plants. The only facility for tea cultivation in Chutiá Nágpur lies in the supply of cheap and abundant labour.

The following kinds of tea are made in Chutiá Nágpur:—Broken pekoe, pekoe, broken tea and dust. Orange pekoe is made in very small quantities. Planters do not find it paying to separate the young buds from the leaves and make the first into orange pekoe. Chutiá Nágpur tea is considered very inferior in the Calcutta market, and fetches about five annas per pound on the average.

Coffee.—There is only one coffee plantation in the sub-division, covering an area of 10 acres. It yielded only 640lbs. of berry during the year 1887-88. The success of coffee is very problematical. It is said that very superior quality of coffee can be produced in Chutiá Nágpur.

Cocoon-rearing.—In Chutiá Nágpur Proper the rearing of *tasar* silk-worm is confined to the jungly villages in the south of parganá Támár in the five parganás, and to the *Mánkipattí* adjoining Támár in the west in the police circle of Khuntí. But the industry is nowhere pursued on a large scale. In Palámau the rearing of *tasar* cocoons is an important rural industry. A full description of the method of rearing cocoons will be given in Part II of this Report; it will suffice to notice here the chief points of interest in the system in vogue in Chutiá Nágpur Proper. In Palámau some cocoons of the November harvest are always preserved as seed for the next year; in Chutiá Nágpur, however, the seed cocoons are gathered in the forest, and sold to the silk-worm rearers at prices varying from 8 to 16 *gundas* (a *gunda* equals four) for the rupee.

They are bought in June and July, and at once threaded and hung to the roof the rearer's house The moths emerge from the smaller cocoons in a few days, but from the larger ones not till August. As to the pairing of the insects and breeding of the worms, the practice followed in Chutiá Nágpur Proper does not differ in any manner from that in vogue in Palámau. As in Palámau there are two harvests of *tasar* cocoon in Chutiá Nágpur Proper: one takes place in September and the other in November. The cocoons of the September harvest are smaller than those of November; but the produce of the one in respect of gross outturn is as important as that of the other.

The *tasar* worm is reared on the *ásan* tree (*Terminalia tomentosa*), and occasionally on the *arjuna* (*T. arjuna*). Both these trees grow wild, and where the *ásan* is found in large numbers, all other trees are removed, and the place turned into a plantation. Only young *ásan* trees are preserved, trees older than 10 or 12 years being for reasons not known unfit for the purpose of rearing the worms. The owners of *ásan* plantations levy a tax of four to eight annas on each man engaged in the rearing of silk-worm. A breeder has to spend Rs 3 to Rs. 4 in the purchase of seed cocoons, and about Re. 1 in tax and miscellaneous petty expenses; for these outgoings, he usually gets an outturn of three *kháris* (a khari equals 1,600) of cocoons valued at Rs. 24. In a good year the outturn may be four or five *kharis*, but the produce is very fitful, and in some years when the worms are visited with disease, it may be absolutely *nil*. The disease referred to is characterized by violent purging, and the worms falling off the leaves and dying in numbers. No remedy is known for its cure, but the breeders observe a host of superstitious practices, the evident object of which is to put themselves entirely aloof from the world at large.

CHAPTER VIII.—Liability to Famine and Famine Warnings.

Liability to famine.—In the records at the Ránchí Collectorate I could find no account of any actual famine prevailing in Chutiá Nágpur Proper; it is certain at any rate that there has been no occasion for relief operations in any of those years in which famine prevailed in the neighbouring districts. I enquired of many old men to ascertain whether they had ever experienced any famine; the only information I could elicit from such enquiry was that in the central table land of Chutiá Nágpur Proper there has been no famine within the memory of the oldest man now living, although high prices were reported to have ruled in certain years like 1866 and 1874. The highest prices reached in 1866 were 11 seers 7chittacks of coarse rice for the rupee; in 1874 the average price of coarse rice was 16·75 seers for the rupee. The high prices of 1866 are said to have been caused by excessive demand for export from outside, and not by any actual scarcity of food-grains in the country. In 1874 prices ruled comparatively high, but the markets were reported to be full, and indeed they could not have been otherwise, considering that unusual exportations of rice took place in that year from Lohárdagá into the famine tracts of Palámau, Házáribágh, and Behar.

Although the central plateau was free from famine, the tracts lying below the plateau on the north and east and known as Torí and the Five Parganás, respectively adjoining the districts of Házáribágh and Mánbhum, were affected to a slight degree in the years 1866 and 1874. In 1886 coarse rice sold at 8 seers for the rupee in Támár, but the scarcity and high price attending on it did not last for more than two months (Ásár and Srávan). In 1874, rice sold at 10 seers for the rupee in the Five Parganás, but this high price did not last for more than a fortnight. The scarcity of either year was not, however, thought serious enough to warrant the undertaking of special relief works in the same way as they were started in Palámau. The opening of a few roads under local management was all that was deemed necessary; besides Rs. 2,360 was given as advances under the Land Improvement Act to enable the construction of petty irrigation works. All fears of a famine were dispelled before the distress was far advanced by a bumper harvest of *máhuá*, and an abundance of jungle products, among which the most important for the time were *seráí* (the fruits of *sál*, *Shorea robusta*) and *piár* fruits (*Buchanania latifolia*).

It may be thus gathered that the central plateau of Chutiá Nágpur Proper has hitherto enjoyed more or less perfect immunity from famine in spite of high prices ruling in certain years; but the Five Parganás and parganá Torí lying below the plateau have been slightly affected by the great famine of 1866 and 1874. It may at first sight appear strange that Chutiá Nágpur Proper enclosed on three sides by districts which have been always regarded as specially liable to famine should enjoy security from the latter; but there are special conditions which have hitherto protected the country from the visitations of a famine.

However serious a drought may be (and all our famines are the direct outcome of drought), it cannot affect the plateau of Chutiá Nágpur Proper beyond a certain degree. The paddy lands of Chutiá Nágpur Proper are divided into two classes, viz., *chaunrá*, or those lying higher up the slopes, and *gárhá*, those lying at their bottom. In the event of a drought beginning in September, the *chaunrá* lands invariably get burnt up, but the *gárhá* lands retain moisture for a considerable time after the rain has ceased. There cannot, therefore, be wholesale loss of paddy in Chutiá Nágpur Proper. In 1888 there was practically no rain since the middle of September till full two months after the close of the paddy harvest, yet the outturn of paddy was nowhere estimated at less than 8 annas, and the average of the sub-division is believed to have been a 10-anna crop. Where provisions for irrigation existed, a 12 to 14-anna crop was gathered in. Thus the drought of 1888, although it is reported to have reduced the harvest to 6 annas and even 4 annas in many places in Behar and Palámau, did not seriously affect Chutiá Nágpur Proper; and although the local authorities felt in the beginning rather nervous at the prospect of an impending scarcity, there ceased before long any ground for anxiety on the score. In case the drought begins earlier than the middle of September, the yield of paddy may be reduced sufficiently low to bring about a scarcity; but if we are to judge from the droughts which led to the great famines of 1866 and 1874, there is little ground for apprehending the cessation of the rains before the middle of September.

A heavy and continuous rainfall in July and August has been known to damage the *bhadoi* and *kharif* crops in Bengal. Such was the case in Palámau in 1873 and also in 1888. The rainfall of these years was equally unpropitious in Chutiá Nágpur Proper, but could not be equally injurious. The reason for this comparative security consist in the undulating nature of the country making its drainage as perfect as could be desired, and in the light character of its soils which are not beaten down and pressed by a heavy downpour to the same extent as the heavy soils of Palámau (*vide* my remarks in page 66 with regard to maize).

It would thus appear that although Chutiá Nágpur Proper is equally subject to drought as the neighbouring countries of Palámau, Mánbhum and Házáribágh, its peculiar physical conformation has conferred upon it more or less absolute immunity from famine. The Fiscal Divisions of Torí and the Five Parganás do not, however, enjoy the same degree of security, the reason for this difference lying in the fact that the proportion of *chaurá* or high-lying paddy land is much greater in these tracts than on the plateau of Chutiá Nágpur Proper, and thus the loss of paddy consequent on a drought is much heavier in the former than in the latter. The upland soils of Torí and the Five Parganás are also more clayey and heavier than the central plateau, and are therefore more liable to suffer from heavy and continued rainfall in July and August.

Chutiá Nágpur Proper enjoys a certain measure of its immunity from famine to the character of its population, able as it is to supplement the produce of their fields by various jungle products. In the best of the times a large portion of the agricultural population looks to the forest for a portion of their sustenance; in a year of deficient harvest their dependence on the latter becomes only greater. The pure Hindu castes are unable to live on jungle produce, and although they are generally better to do than the aboriginal and semi-Hinduized classes, they are more apt to feel the pressure of scarcity and high prices. Such is also the case with the people of the central parganás, where there is little or no forest at the present day. It appears possible that in proportion as the people of Chutiá Nágpur Proper are weaned from jungle produce, they will become less able to withstand the effects of a scarcity or famine.

Unlike the Hindus, the Kols and the semi-Hinduized aborigines have no objection to emigrating to long distances in search of employment. This is a very happy feature of the population of Chutiá Nágpur Proper—one that will, in a large measure, relieve the pressure of a scarcity, particularly as it takes away the very people who stand in want of relief.

Droughts.—Drought appears to me to be the only circumstance which can give rise to scarcity and famine in Chutiá Nágpur Proper. Storm-waves and floods are out of the question; blights have been now and then known to cause partial failures in limited areas, but the injury caused by them can never be great or general. In Chutiá Nágpur Proper there have been several droughts within living memory. Among these, I should mention those of 1820, 1823, 1827, 1837, 1865, 1873, and 1888, but none of these culminated in actual famine. It may be safely predicted that in the event of a drought beginning early in September, a 12-anna loss of crop would result, and in spite of good *bhadoi* harvest, famine might be apprehended. Such a contingency, however, seems very improbable. The only drought of which I possess any records are those of 1873 and 1888. The conditions of rainfall in these years were parallel from many points of view. In 1873 the rains began late, and part of the *bhadoi* crops was sown, a lull then ensued; and when the rains again commenced (in July), it was not only too late to sow the remainder of the *bhadoi* crops, but the rain came down in such torrents as to beat down the young crops. The last rainfall of any consequence took place on the 13th September, and was followed by an unbroken stretch of dry hot weather till January of the succeeding year (1874). In 1888 the conditions of rainfall were very similar. The first monsoon shower fell on the 27th of June. In July and August the fall was unusually heavy and continued, and resulted in partial loss of *bhadoi* crops. The last rainfall of any consequence took place on the 17th of September, that is four days after the corresponding date of 1873. The following five months were practically rainless.

Famine map of the sub-division.—In the famine map annexed to this Report, I have shown the sub-division in two distinct shades of dark—the police circles of Sillí and Támár, including the tract known as the Five Parganás, and the police circle of Bálumat, including the pargana of Torí in darker shade, indicating occasional liability to famine, and the remaining ten circles in a lighter shade, indicating that they are, practically speaking, not liable to famine. I may qualify this statement by saying that, under exceptionally aggravating circumstances which have not, however, been yet known to occur, these police circles may be visited by a famine. Such can, at any rate, be the case at widely distant intervals of time.

Area of the tracts liable to famine, their population and density.—The areas of the three police circles liable to famine, their population and its density, are shown below:—

	Area.	Population.	Density per square mile.
Sillí	323	68,335	221·56
Támár	616	93,454	151·71
Bálumat	639	66,253	103·68
Total ...	1,578	228,042	144·51

Cause of special liability to famine.—Drought, as has been said above, is the invariable cause of famine in the tracts liable to it.

Relief works.—The famines of 1866 and 1874 were not so serious in Torí and the Five Parganás as they are known to have been in Palámau and Behar. No relief works were therefore undertaken. Some roads were opened in 1874 under the district local management both in Torí and the Five Parganás, but their names were not mentioned in any of the fortnightly narratives of famine of that year. In the event of a famine, Chándwá and Bálumut in Torí, Sillí, Ráhe, Bundu, Támár, and Táimárá in the Five Parganas may be made convenient centres of relief works. They are all important market places, and situated on the main lines of traffic, which will, in case of a famine, form the scenes of relief.

Agricultural relief works.—The construction and repair of embankments of village water-reservoirs will afford a suitable and legitimate appointment to a

certain proportion of relief labourers. Such reservoirs are calculated to confer future immunity from the effects of drought by providing the paddy fields with irrigation, but also to encourage the formation of new fields, and also the cultivation of various cold-weather crops, which cannot now be cultivated through want of water-supply. The district authorities are now engaged in making a list and estimate of various irrigation reservoirs throughout the sub-division. Although there is scope of work in almost every village, such works as the construction of irrigation reservoirs for the purpose of famine relief should be limited to only the larger villages where working gangs can be easily organised; to undertake petty works on every village is out of the question, as it will enormously add to the cost of supervision. Loans may be, however, given to zamindárs to undertake such works on their own responsibility, and some modified and simple procedure should be adopted to induce them to apply for advances. Besides irrigation works, some employment can be given on such works as the reclamation of waste and useless jungle and the digging of new rice-fields. As to the possibility of making the tracts non-liable to famine, I have more than once expressed my conviction that the productive powers of Chutiá Nágpur Proper may be largely increased, and the country made practically secure from droughts by means of irrigation. The physical configuration of the country is peculiarly suited to the construction of an indefinite number of irrigation reservoirs; the only thing that is wanted is capital. In the present circumstances of the country any large outlay of capital in irrigation works by the people is out of the question (*vide* pages 47—8). Further remarks on the subject are unnecessary.

CHAPTER IX.

SECTION I.—TREES YIELDING TIMBER.

The following list enumerates and describes the various timber trees found in Chutiá Nágpur Proper:—

No.	Name (vernacular).	Botanical name.	Description of wood.	REMARKS.
1	Sál ...	Shorea robusta	The most important, durable, and widely-used timber of the sub-division. It is used for all kinds of work in which strength and durability are wanted, such as beams, rafters, and doors, piles, planking, &c., and above all for railway sleepers (*vide infra*).	
2	Kusum ...	Schleicheria trijuga.	Furnishes extremely hard wood used for rice-pounders, oil-mills, and sugar-presses.	One of the lac-yielding trees.
3	Gámbhár ...	Gmelina arborea	A light but durable and easily worked wood; very lasting under water. Is highly esteemed for planking, furniture, panelling, palanquins and carriages, toys, packing-cases, and ornamental work.	
4	Sisoo ...	Dalbergia sisoo	Wood of a dark colour, close-grained, and does not warp or split. Is highly esteemed for furniture.	
5	Jack ...	Artocarpus integrifolia.	The heartwood is of a beautiful yellow colour, very close-grained, and is valued for furniture and cabinet work.	
6	Simul or Sember.	Bombax malabaricum.	Wood very light and elastic. Is used for packing boxes.	
7	Máhuá ...	Bassia latifolia	Wood very hard and durable, but the tree being very useful is seldom felled for timber.	
8	Karam ...	Nauclea cordifolia.	Wood of a beautiful pale yellow; close-grained but soft, resembles box-wood; used for panelling and cabinet-work.	
9	Dhaw or dhontá.	Anogeissus latifolius.	Hard, tough, light coloured wood; used for building, cart axles, and poles. Should be kept dry.	It gives a good fuel and excellent charcoal.
10	Sidá ...	(Lagerstrœmia parvifolia.)	Wood tough, elastic, seasons well, works freely, and is fairly durable; used for ploughs and axe-handles.	
11	Kend ...	Diospyros melanoxylon.	The central blackwood or ebony used for all purposes of fancy work and carving.	
12	Asan ...	Terminalia tomentosa.	Timber very hard and durable, and improved by being kept under water; not touched by whiteants; used for miscellaneous work.	It is the true on which *tasar* silk-worms are reared in the Five Parganás, the *Mdnkiputtí* and in Palámau.

No.	Name (vernacular).	Botanical name.	Description of wood.	Remarks.
13	Jáman ...	Eugenia Jambolana.	Wood reddish grey, rough, darker near the centre; no distinct heartwood; fairly durable and not subject to the attacks of whiteants; used for miscellaneous work.	
14	Mango (ámbá.)	Mangifera indica	Wood soft and light; used for packing-cases, planking, &c.	
15	Piár ...	Buchanania latifolia.	Wood seasons well and is fairly durable; used for miscellaneous work.	A small tree of which the fruits and kernels are eaten with relish; may be grown as an ornamental tree in gardens.
16	Ginyár (Jiul).	Odina wodier ...	Wood reddish brown when ripe; used for miscellaneous work.	
17	Amaltás ...	Cassia fistula ...	Wood close-grained; little used.	
18	Arjun ...	Terminalia arjuna	Wood of no special value.	
19	Kurchí ...	Halarrhoea antidysenterica.	Wood close-grained and good for turning; used for making toys.	The bark of *kurchí* is a specific for dysentry.
20	Nim ...	Melia azadirachta	Excellent, hard and heavy wood, not unlike mahogany; insects will not touch it; used for furniture and chests.	
21	Amrá ...	Phyllanthus emblica.	Timber hard and durable under water.	
22	Baer ...	Zizyphus Zuzuba.	Timber small, but tough and close-grained	
23	Bamboo ...	Bambusa stricta	Very useful for housebuilding purposes, poles, cort-frames, &c. Strictly speaking, not a timber-tree.	The bamboos of the subdivision are all wild, never cultivated; are small in length and thickness; the trees grow in isolated clusters in mixed forests. There are two species—one being thorny and growing in dense clusters; the other thornless and longer in size.

Sál.—*Sál* is the most important and widely-used timber of the sub-division. Good sized trees have become very scarce in the eastern and central parganás owing to the wholesale destruction of forests. In these parts the jungles have degenerated into low scrub or *pátrás* through want of a proper system of conservation. True *sál* forests are still found in the south of Támár, the southern outskirts of the Chutiá Nágpur plateau bordering on Singbhum; and in the parganás to the west and south-west. Some of these forests still remain inaccessible owing to the hilly and difficult nature of the country. In past times a large portion of valuable *sál* forest was destroyed by the practice of girdling the trees for *dhuná* or resin, but the zamindárs have now awakened to the value of the timber, and do not allow the trees being tapped. In past years a large amount of *sál* timber used to be annually exported from the sub-division, particularly from the Five Parganás to the East Indian Railway for sleepers; but in recent years the demand has greatly fallen off on account of the introduction of steel sleepers. Támár was the head-quarters of many timber-supplying firms.

Section II.—Uncultivated Plants yielding food.*

No.	Vernacular name.	Botanical name.	Remarks.
	Seeds.		
1	Siher phal ...	Bauhinia vallii ...	Seeds eaten boiled.
2	Khari ...	.....	„ „ roasted.
3	Korkot ...	Dillenia indica ...	„ stewed, dried and pounded.
4	Bhelwa ..	Somecarpus anacardium	„ eaten ripe. The fruit is used as marking nut.
5	Bhursa pakir phal	Ficus ? ...	„ „ „
6	Tangor pakir phal...	Ficus anfectoria ...	„ „ „
7	Behera ..	Terminalia belerica ...	„ „ pounded and cooked.
8	Bankundi ..	Bephalandra proculoidis	„ fried in oil.
9	Bar reonna ...	.....	„ eated raw and cooked.
10	Kuttandu ...	.....	„ „ ripe.
11	Borka makar kend ..	Diospyros montera ...	„ „ „
12	Dembu ...	Cucumis ? ...	„ dried and cooked; both wild and cultivated.
13	Amthi pakir phal ..	Ficus cordifolia ...	„ eaten ripe.
14	Singhara ...	Trapa bicornis ...	„ „ „ Kernel eaten raw and boiled.

* The list of food-yielding plants is reproduced from Mr. Black's Settlement Report of the Chutiá Nágpur Estate.

No.	Vernacular name.	Botanical name.	Remarks.
	Seeds—concld.		
15	Kusee ...	Mucuna imbricata.	
16	Alkusa ...	„ pruriens.	
17	Khanach ...	„ nivea.	
18	Bádám ...	Terminalia catappa ...	Seeds used as a substitute for almonds and eaten raw.
19	Band kobi ...	Fuirena cilians ...	Seeds used as meal.
20	Ámaltás ...	Cassia fistula ...	„ make *sherbute*.
21	Pudmo ...	Nelumbium speciosum	Seeds eaten raw.
	Fruits.		
22	Keond ...	Diospyros melanoxylon...	Ripe and uncooked.
23	Máhuá ...	Bassia latifolia ...	Raw and stewed; fruits called *dori*; seeds yield oil; flowers largely eaten as a staple.
24	Kat karji ...	Caesalpinia bonducella...	Raw or cooked; leaves also eaten cooked.
25	Pithor ...	.....	
26	Jámun ...	Euguia jambolana ...	Ripe, uncooked.
27	Pordho ...	Ficus cunia ...	„ „
28	Jitia pipar ...	„ religiosa ...	„ „
29	Bar ...	„ indica ...	„ „
30	Dumbar ...	„ glomerata ...	„ „ also stewed.
31	Páprá ...	Gardenia latifolia ...	„ and uncooked.
32	Bel ...	Aegle marmlos ...	„ and stewed.
33	Serai ...	Shorea robusta ...	Boiled and roasted.
34	Piár ...	Buchanania latifolia ...	Ripe. Seeds eaten under the name of chironji.
35	Kusum ...	Schleicheria trijuga ...	„ uncooked. Seeds yield oil.
36	Makarkándá ...	Diospyros embryopteris	„ „ „ „
37	Keonjhi ...	Sterculia urens ...	„ „ „ „
38	Daho ...	Artocorpus lakrochia ...	„ and stewed.
39	Bhursa phal ...	.....	„ uncooked.
40	Kudrum ...	Hibiscus sabdariffa ...	„ „ also cultivated.
41	Ámti pipar ...	Ficus ? ...	„ „
42	Pindar ...	.....	Eaten as a vegetable; fried.
43	Baer ...	Zizyphus zuzuba ...	Raw; also dried and pounded and eaten as *chatni* with rice.
44	Khajur ...	Fœnix sylvestris ...	Raw.
45	Kanond ...	.....	„
46	Kundri ...	Cucumis ...	Eaten as a vegetable.
47	Barhal ...	.....	„ also ripe.
48	Gharsul ...	.....	„ ripe.
49	Ámbá ...	Mangifra indica ...	„ raw and ripe. Kernels eaten in famine times.
50	Siakul ...	Zizyphus denoplia ...	Eaten ripe like *baer*.
51	Benchi ...	Carisso carandus ...	„ „
52	Kokoaroo ...	Olax scandexs.	
53	Kuthbel ...	Feronia elephantus ...	Pulp made into *sherbut*.
54	Tetul ...	Tamarindus indicus ...	Makes *chatni*. Exported in large quantities.
55	Bághankura ...	Alanguini decapetatum.	
56	Katai ...	Flacourtia sapida.	
57	Panizali ...	„ cataphraeta.	
58	Ámrá ...	Phyllanthus embtica ...	Used for making pickles; raw and cooked; also ripe.
59	Kátchuá ...	Bauhimia váriegata ...	Fruit of *kachnar*; eaten as a vegetable.
60	Bohl ...	Mimusops elongi.	
61	Sálgá ...	Boswellia thurifera.	
62	Rákhál sasá ...	Karxera umbellata ...	Both ripe and unripe fruit eaten.
63	Telá kucha ...	Coccinia grandis ...	Ripe fruits eaten.
64	Palás ...	Butea frondosa ...	Stamens and young pods eaten.
65	Larea urid ...	Phaseolus mungo ...	Eaten as pulse.
66	Bankurthi ...	Cyanopsis (sp.?) ...	„
	Leaves eaten as ság.		
67	Umtoá ...	Antidesma ghaesembha.	
68	Kátái ...	Flacourtia sapida.	
69	Tentul ...	Tamarindus indicus.	
70	Bhádwilá ...	Olax scandcus.	
71	Chakura ...	Cassia ?	
72	Káchnár ...	Bauhinia variegata.	
73	Amurul ...	Oxalis corniculata.	
74	Susni ...	Morselia quadrifiliata.	
75	Bátwá ...	Amaranthus irrides.	
76	Kanta ...	„ spinosus.	
77	Sáronchi ...	Alternanthera sessilis.	
78	Chota kulpa ...	Trochodesma indicum	
79	Bara kulpa ...	„ teylanum.	
80	Ghima ...	Mollengo spergulia.	
81	Burdmutta ...	Sperma cocchispida.	
82	Maya or Káet ...	Polygonum plebissum.	
83	Kachu ..	Colocasia antiquorum.	
84	Pechki ...	Ditto.	
85	Poa ...	Cissampelos (?)	

No.	Vernacular name.	Botanical name.	REMARKS.
	Leaves eaten as ság. —concluded.		
86	Herinâ ...	Marsdenia tenacissima.	
87	Dhabni ...	Jussicun repens.	
88	Dhwinp ...	Leneas ?	
89	Cheera ...	Polycarpus.	
90	Máthá ...	Antidesma diandrum.	
91	Silner ...	.....	
92	Garandi ...	.....	
93	Hirlicha ...	.....	
94	Haru ...	.....	
95	Chakondá ...	Cassiatora.	
96	Chimti ...	.....	
97	Beng ...	.....	
98	Moonga ...	.....	
99	Kosta ...	.....	
100	Adre ...	.....	
	Roots.		
101	Bengo áloo ...		
102	Dolá áloo ...		
103	Dudha áloo ...	Disascorea (sp. ?) ...	Eaten boiled; some can be eaten raw.
104	Koondri ...		
105	Genti ...		
106	Kesur ...	Scirpus kysoor ...	Raw and boiled.
107	Kalai ...	Dolichos biflorus ...	Boiled.
108	Bhedá kandu ...	.....	
109	Chaili kandu ...	.....	
110	Bánserá or Molám Padmo.	Nelumbium speciosum ...	Eaten raw.
111	Tikhur (wild arrow-root.)	Curcuma lencorrhiza ...	Made into a delicate sweetmeat with milk and *gur*.
	Miscellaneous.		
112	Banskasil ...	Bambusa stricta ...	Young shoots pulped, dried, and cooked with *mâr*. also called *kariá*.
113	Khajur ...	Phænix acaulis ...	Soft-growing part eaten raw.
114	Sáluk ...	Nymphea lotus ...	Leaf stalks and under-ground stems eaten.
115	Hárjorá ...	Vitis quadrangularis ...	Young shoots eaten.
116	Banskhukundi or Kukrichátá.	Agaricus (sp. ?) ...	Mushroom, growing on dead bamboo stumps, eaten and stewed.
117	Káchnár phul ...	Bauhinia variegata ...	Flowers eaten as *ság*.
118	Jirhul	Ohlororylon swietania ...	Ditto.

SECTION III.—TREES AND PLANTS YIELDING MEDICINAL DRUGS.

The following drugs are used both in Europe and India. Descriptions of their medicinal properties are reproduced from Dr. Watt's account of the vegetable products of India given in the catalogue of exhibits at the Indo-Colonial Exhibition of 1886:—

1. *Acacia catechu.*—Vern. *khayer*. "A moderate-sized, gregarious, thorny deciduous tree, common in most parts of India and Burma, extending in the sub-Himalayan tract westward to the Indus. The extract known as the catechu or cutch is used medicinally as an astringent in fevers and other maladies."

2. *Aegle marmelos.*—Vern. *bél*. "(*a*) The unripe fruit is cut up and sun-dried, and in this form is sold in the bazars in dried, whole or broken slices. It is regarded as astringent, digestive and stomachic, and is prescribed in diarrhœa and dysentery, often proving effectual in chronic cases after all other medicines have failed. It seems especially useful in chronic diarrhœa; a simple change of the hours of meals and an alteration in the ordinary diet, combined with bael fruit, will almost universally succeed. (*b*) The ripe fruit is sweet, aromatic, and cooling; and made into a morning sherbet, cooled with ice, is pleasantly laxative and a good simple cure for dyspepsia. The dried ripe pulp is astringent and used in dysentery. (*c*) The root bark is sometimes made into a decoction and used in the cure of intermittent fever. It constitutes an ingredient in the *dasamul* or decoction of ten roots. (*d*) The leaves are made into poultice, used in the treatment of ophthalmia, and the fresh juice diluted is praised in catarrhs and feverishness. (*e*) The astringent rind of the ripe fruit is used in dyeing and tanning."

3. *Datura Stramonium.*—Thorn-apple, vern. *dhutrá.* "A coarse annual met with in the temperate Himálayá, from Kashmir to Sikkim. The seed is used criminally, but is also prescribed medicinally, especially in asthmatic complaints. The leaves are applied to boils and ulcers, and are smoked with tobacco for asthma. The uses are in fact very similar to those of *D. fastuosa.* All daturas produce dilatation of the pupil, and have been recommended as substitutes for belladonna.

4. *Eugenia jambolana.*—Vern. *jáman.* "A moderate-sized tree, found wild or in cultivation all over India, from the Indus eastward, ascending to altitude 5,000 feet. The bark is astringent and used in cases of dysentery, and the decoction as a tooth-gargle. The fresh juice of the bark is given with goat's milk in the diarrhœa of children. A vinegar prepared from the juice of the unripe fruit is an agreeable stomachic and carminative; it is also used as a diuretic. The expressed juice of the leaves is employed, alone or in combination with other astringents, in dysentery. A considerable interest has recently (in Europe and America) been raised in the seeds of this tree as a drug useful in the treatment of diabetes. This property appears to be quite unknown to the Natives of India."

5. *Holarrhoea antidysenterica.*—Vern. *kurchí.* "It is a sure remedy for dysenteric affections, has been borne out by the statements of many medical practitioners, both Native and European. The seeds (known as *indrajan*) are considered by the Arabic and Persian writers as possessed of carminative and astringent properties, and are used in chronic chest affections, such as asthma, and also in colic and diuresis. For many years great confusion existed about the identity of this plant. Through an early mistake it received the name of *Wrightia antidysenterica.* Partly on this account, the bark was in India adulterated with that obtained from *Wrightia tinctoria,* and hence Conessi bark fell into disrepute owing to the inert action of the adulterant."

6. *Sesamum indicum.*—Vern. *til.* "Sesamum seed is considered emollient, nourishing, tonic, diuretic and lactagogue. It is said to be especially serviceable in piles, by regulating the bowels and removing constipation. Ground to a paste with water, it is given with butter in bleeding piles. Sweetmeats made of the seed are also beneficial. A poultice of the seed is applied to ulcers. A powder made from the roasted and decorticated seed is used as an emollient both externally and internally. Both the seed and the oil are used as demulcent in dysentery and urinary diseases. Sesamum oil has been employed as a substitute for olive oil in the preparation of linimentum calcis. The seed if taken largely is capable of producing abortion. In amenorrhœa a warm sitz bath containing a handful of seeds has been found very efficacious. In decoction the seed is said to be emmenagogue; the same preparation, sweetened with sugar, is prescribed in cough; a compound decoction with linseed is used as an aphrodisiac; a plaster is applied to burns, scalds, &c.; a lotion from the leaves is used as a hairwash, and is supposed to promote the growth of the hair and make it black; a decoction of the root is said to have the same properties."

7. *Strychnos nux-vomica.*—Vern. *kuchilá.* This tree is rather rare in Chutiá Nágpur proper. "Nux-vomica seed produces a sort of intoxication, for which it is habitually taken by some natives as an aphrodisiac. In overdoses it acts as a virulent poison. Medicinally the seed is used in dyspepsia and diseases of the nervous system. It is very useful in palsy, relaxation of the muscles and tendons, debility and chronic rheumatism. It has been recommended in neuralgic affections, atonic diarrhœa and chronic dysentery, also in habitual constipation, prolapsus of the rectum, spermatorrhœa, &c. It has also been employed in intermittent fevers, epilepsy, diabetes, anæmia, chlorosis, and other affections."

8. *Tamarindus indica.*—Vern. *Tentul.* "The ripe fruit is refrigerant, digestive, carminative, and laxative, useful in bilious disorders, such as burning of the body, costiveness, and in intoxication from spirituous liquors or datura, &c. The shells of the ripe fruit are burnt and their ashes used in medicines of the sort. The pulp of the ripe fruit, as well as a poultice of the leaves, is recommended to be applied to inflammatory swellings. A gargle of tamarind water is recommended in sore throat. The seed is said to be astringent and used as a poultice to boils. The leaves crushed with water and expressed yield an acid fluid, useful in bilious fever and scalding of the urine; made into

a poultice, they are applied to reduce inflammatory swellings and to relieve pain. A poultice of the flowers is used in inflammatory affections of the conjunctiva; the juice expressed from them is given internally for bleeding piles. The bark is considered to have astringent and tonic properties."

9. *Ricinus communis.*—Castor-oil plant. Vern. *erand.* "Castor-oil is a mild and efficacious purgative, useful in costiveness, tympanitis, fever, inflammation, &c. It is much valued in chronic rheumatic diseases. The root is useful in various forms of rheumatism, such as lumbago, pleurodynia, sciatica, &c. The root bark is used as a purgative and alterative in chronic enlargements and skin-diseases. The fresh juice of the leaves is used as an emetic in poisoning by opium and other narcotics, and a decoction or poultice may be used as a lactagogue."

The following drugs are exclusively used by native physicians and by the people of Chutiá Nágpur:—

1. *Abras precatorius*; two varieties, vern. *charká* or white *gunjphal*, and *barká* or red *gunjphal.* The fruit of the former, pounded in water and given internally, acts as a tonic. The pounded root of the latter is applied externally as a sedative for pains.

2. *Boswellia thurifera.* Vern. *sálgá* or *sáleyá.* The gum is known as the *guggulu* of Indian bazars. "The guggulu was regarded as a demulcent, aperient, alterative, and a purifier of the blood. The gum at the present day is used in rheumatism, nervous diseases, scrofulous affections, and skin-diseases. It is regarded as a diaphoretic and astringent, and is used in the preparation of ointment for sores. It is also prescribed with clarified butter in syphilitic diseases, with cocoanut-oil for sores, and as a stimulant in pulmonary diseases. The olibanum is also given in bronchorrhœa and chronic laryngitis, employed both internally and in the form of fumigation. An ointment has been prepared from it, which is said to be a good stimulant application to carbuncles, ulcerations, boils, &c. The Mahomedans consider it hot and dry, and to have dessicative, astringent, and detergent properties. Mixed with gum acacia it is used as a corrective for foul breath. If given for any length of time in one-ounce doses it is said to reduce obesity."

3. *Calotropis gigantia.* Vern. *mádár* or *ákand.* A small shrub abundant in Chutiá Nágpur proper. "The root-bark and juice of this plant are used in medicine for their emetic, diaphoretic, alterative, and purgative properties. In the treatment of dysentery the dried bark of the root is stated to be an excellent substitute for ipecacuanha. The bark, root, and dried milky sap may be used in small doses in certain cutaneous affections, such as leprosy and secondary syphilis. The root-bark, in large doses, acts as an emetic. A preparation from it is administered to promote secretions, and is stated to be useful in enlargements of the abdominal viscera, intestinal worms, cough, ascites, anasarca, &c. The flowers are considered digestive, stomachic, tonic, useful in asthma, catarrh, and loss of appetite."

4. *Cassia fistula.* Vern. *ámaltás.* A moderate-sized deciduous tree, common in the jungles of Chutiá Nágpur proper. "The pulp of the fruit or the root-bark are generally used as simple purgatives. This drug is described as lenitive and useful in relieving thoracic obstructions. It is often combined with tamarinds. Externally it is useful in gout and rheumatism. The flowers are made into a confection known as *gul-kand*; this is viewed as a febrifuge. The bark and the leaves, like those of most other species of this genus, are valued external applications in skin-diseases."

5. *Cassia tora.* Vern. *chákonda.* A common weed of village waste. "The leaves are used as an aperient. Both leaves and seeds constitute a valuable remedy in skin-diseases, chiefly ringworm and itch. The root rubbed to a pulp with lime-juice has almost specific powers in the case of ringworm."

6. *Citrus medica limonum.* Vern. *limbu.* "There are three officinal parts—(1) the outer part of the rind; (2) the essential oil of the rind; (3) the juice of the ripe fruit. The rind is said to be stomachic and carminative. Lemon oil is carminative in doses of from two to four drops. It has been applied in some cases of ophthalmia, but with doubtful results. Lemon juice is highly valued as an antiscorbutic and refrigerant; primarily, antalkaline; secondarily, antacid. It forms the best remedy for scurvy, and an excellent drink in fever and inflammatory affections. It has met with success in acute rheumatism,

dysentery, and diarrhœa. Recently it has been recommended as a simple anti-periodic. It also forms an antidote to acro-narcotic poisons."

7. *Curcuma aromatica.* Vern. *bonhaldi*—"The round, short rhizomes of this plant are of a pale yellow colour, and possess at all times an agreeable fragrant smell and a warm aromatic taste. They are used medicinally, being regarded as tonic and carminative."

8. *Mangifera indica.* Vern. *ám* or *ámbá.*—"The ripe fruit is laxative. The bark is used as an astringent, valuable in hœmorrhages, diarrhœa, and other discharges. The decoction of the kernel, either alone or in combination with *bél* and ginger, is generally prescribed in diarrhœa. The juice of the kernel, as a snuff, is employed to stop nasal bleeding. The kernel is also described in the "Indian Pharmacopœia" as an anthelmintic, and containing a large quantity of gallic acid, is said to be highly useful in bleeding piles and menorrhagia. The unripe fruit has the reputation of being useful in ophthalmia, and the seeds in asthma."

9. *Melia azadirachta.* Vern. *nim* "A large tree planted and self-sown throughout the greater part of India and Burma. The fruit is used medicinally as an antiseptic, purgative, emollient, and anthelmintic. The bark is known as astringent, tonic, and anti-periodic, and is used in intermittent and other fevers, in constitutional weakness, and during the convalescent state after fever and other diseases. The leaves are stimulant and applied to ulcers and skin-diseases of long standing. They are also used in the form of poultices to disperse glandular tumours, and in the form of a pulp in cases of pustular eruptions and small-pox The oil obtained from the seeds effects suppuration of scrofular glands, and is given in leprosy. The gum is said to have stimulant properties."

10. *Nerium odorum.* Vern. *Korabi.* "There are two varieties, one with white flowers and the other with red. All parts of the plant, especially the root, are recognised by the natives as poisonous, and as such are used for criminal and suicidal purposes. When used medicinally, over-doses of the root are productive of serious and even fatal effects. A preparation of the root is sometimes used to procure abortion. In skin-diseases, such as leprosy and inflammatory affections, the root and bark are highly beneficial. In the form of a paste it is recommended to be applied to ulcers on the penis. The juice of the tender leaves forms a remedy for ophthalmia. The decoction of the leaves is said to reduce swellings, and the paste made from the bark is a medicine for itch and ringworm."

11. *Nyctanthes arbortristis.* Vern. *harsinghar.* "The leaves are useful in fever and rheumatism. The fresh juice of the leaves is given with honey in chronic fever. A decoction of the leaves, prepared over a gentle fire, is recommended by several writers as a specific for obstinate sciatica. Six or seven of the young leaves are rubbed up with water and a little fresh ginger, and administered in obstinate fevers of the intermittent type. The powdered seeds are used to cure scurfy affections of the scalp."

12. *Occimum basibium. Sweet basil.* Vern. *babaitulshi.* "The seed is mucilaginous and cooling, given in infusion in gonorrhœa, diarhrœa, and chronic dysentery. The juice of the leaves forms an excellent nostrum for the cure of ringworm, and the bruised leaves for scorpion stings. The seeds and flowers also possess stimulant, diuretic and demulcent properties. Diaphoretic and expectorant actions are also ascribed to the plant. A cold infusion of the seed relieves after pains of parturition."

13. *Phyllanthus emblica.* Vern. *ámlá.* "It is purgative when fresh, but when dry is used as an astringent in bowel-complaints and hæmorrhages. It is useful in diarrhœa and dysentery, and is regarded as an antiscorbutic. It contains a large proportion of gallic acid. The flowers are employed as a refrigerant and aperient. The bark is astringent. An extract from the root is used medicinally. The fresh juice is cooling, refrigerant, diuretic, and laxative. The exudation from the incisions on the fruit is used as an external application in inflammation of the eye."

14. *Pongamia glabra.* Vern. *karanj.* "The seed and the expressed oil are used externally in skin-diseases, and for this purpose the oil has been found extremely useful, and deserves to be introduced into European medical practice. A poultice of the leaves is applied to ulcers infested with worms."

15. *Punica granatum.*—Pomegranate. Vern. *ánár* or *dálim.* "The fresh juice of the fruit is an ingredient of cooling and refrigerant mixtures for dyspepsia. The rind of the fruit is used as an astringent in diarrhœa. The seed is stomachic, the pulp cardiac and stomachic. Pomegranate peel, with opium and an aromatic such as cloves, is an efficacious remedy in chronic dysentery and diarrhœa. A decoction of the bark followed by a purgative acts as an anthalmintic. The efficacy of the decoction of the root-bark as a remedy for tapeworm is now well-established in India."

16. *Somecarpus anacardium.* The marking nut. Vern. *bhelá.* "The acid juice of the marking nut is a powerful vesicant, and is applied externally to cold swellings. The ripe fruit is regarded as acrid, heating, stimulant, digestive, nervine, and escharotic, and is used in dyspepsia, piles, skin-diseases, nervous debility, &c. In Goa, the nut is used internally in asthma after having been steeped in butter-milk, and is also given as a vermifuge."

17. *Terminalia chebula.* Myrobolan. Vern. *haritakí.* "The myrobolan was highly extolled by the ancient Hindus as a powerful alterative and tonic. It is also described as laxative and stomachic. Seven varieties of *haritakí* are mentioned by the older writers, of which two are at present recognised—the large ripe fruit called *haritakí*, and the unripe fruit called *jangí haritakí.* Chebulic myrobolans are used in fever, cough, asthma, urinary diseases, piles, intestinal worms, chronic diarrhœa, costiveness, flatulence, vomiting, hiccup, heart diseases, enlarged spleen and liver, ascites, skin-diseases, &c. In combination with emblic and beleric myrobolans, and under the name of *triphala* or the three myrobalans, a preparation is extensively used by the Hindus as an adjunct to other medicines in the treatment of many diseases."

18. *Tinospora gulancha.* Vern. *gulancha.* "The stem, leaves, roots, and watery extract are all used in Hindu medicine. The entire plant is regarded as a valuable alterative and tonic, and useful in general debility, fever, jaundice, skin-diseases, rheumatism, urinary diseases, irritability of stomach, and syphilitic affections. *Gulancha* is also regarded by the natives in certain parts of India as a specific for the bites of poisonous insects and venomous snakes."

19. *Vitex negundo.* Vern. *sindur* or *nishindá.* "The root is tonic, febrifuge, and expectorant. The leaves are aromatic, tonic, and vermifuge, and given in decoction, with the addition of long pepper, in catarrhal fever with heaviness of head and dullness of hearing. A pillow, stuffed with the leaves, is placed under the head to relieve headache. The juice of the leaves is applied to ulcers. An oil, prepared with the juice of the leaves, is applied to sinuses and scrofulous sores. Dr. Fleming remarks that the leaves are discutient and useful in dispersing swellings of the joints from acute rheumatism, and of the testes from suppressed gonorrhœa."

20. *Eleusine indica.* Vern. *sonai máruá* grass. The roots pounded with water are used by the people as an antipyretic.

21. *Andropogon muricatus.* Vern. *birní* grass. The pounded roots are given externally for snake-bite.

22. *Cyperus rotundus.* Vern. *junglipuro.* The pounded roots are used externally for headache.

23. *Lawsonia alba.* Vern. *mothá* grass. The roots pounded with garlic are used for fever.

24. *Bauhinia purpurea.* Vern. *káchnár.* The pounded roots and bark are applied externally for rheumatism.

25. *Bombax malabaricum.* Vern. *shimul.* The bark of this tree, and that of *Spondias mangifera* (ambera) and of *Mangifera indica* (mango) acts as an astringent in case of diarrhœa.

26. *Vitis quadrangularis.* Vern. *hárjorá*, a creeper. The pounded bark and leaves are used as a poultice with splints in case of broken bones.

27. *Wrightia tomentosa*, a shrub. Vern. *dudhia.* The root pounded with water is given internally in the first stage of fever.

28. *Kanaphal* (dioscoraceous creeper). The roots pounded with water are rubbed externally for muscular pains.

29. *Chloroxylon swietenea.* Vern. *jirhul.* The pounded root and stem are applied externally for lumbago.

30. *Hibiscus* (sp.?). Vern. *bariais.* The root and stem tied to the hairs of a pregnant woman at the back of her head is believed to quicken child-birth.

31. *Solanum xantho-carpum.* Vern. *rangaini.* The root boiled with water is given internally for stomach-ache.

32. *Zizyphus zuzuba.* Vern. *baer.* The pounded and boiled roots are given internally in cases of gonorrhœa.

33. *Moringa* (sp.?). Vern. *banmungá.* The pounded roots are used as poultice over boils.

34. *Cyanopsis* (sp.?). Vern. *ban-kurthí.* The infusion of the leaves and stems given in coughs and asthma.

35 *Acorus calamus.* Vern. *ghorbunch.* The pounded root is given both externally and internally for fever and agues. The root and leaves pounded with water are applied to the forehead for headaches.

36. *Shorea robusta.* Vern. *sál.* The fruit pounded with water is given internally for diarrhœa.

37. *Peper* (sp.?). Vern. *nág bai.* The pounded root and leaves are given externally for opthalmia and snake-bites.

38. *Cactus indicus.* Vern. *nág pheni.* The pounded leaves after being warmed are given externally for pains.

39. *Hemidesmus indicus.* The pounded roots are considered a good tonic.

40. *Euphorbia neripholia.* Vern. *sig.* The leaves, on being warmed over a fire, are applied in muscular pains.

41. *Grislea tomentosa.* Vern. *dhaw* or *dhontá.* The flowers, pounded with water and sugar, are eaten as cooling.

The above descriptions of the medical plants Nos. 21 to 41 are taken from a statement appended to Mr. Stack's Settlement Report of the Chutiá Nágpur Estate.

Section 4.—Trees and plants yielding dyes.

The following list of dyes used in Chutiá Nágpur Proper was drawn up by Mr. T. F. Peppe for the Economic Museum, and is reproduced from volume XVI of the Statistical Accounts of Bengal.

(1) Lodh chhál (*Symplocas racemosa*), bark boiled with *saji*, an impure carbonate of soda, dyes red. (2) Ámlá (*Phyllanthus emblica*), máhuá (*Bassia latifolia*), sál (*Shorea robusta*), gulár (*Ficus glomerata*), ám (*Mangifera indica*), bar (*Ficus religiosa*), jáman (*Eugenia jambolana*), and *káchnár* (*Bauhinia variegata*); barks boiled up together dye a deep black. (3) Sál chhal (*Shorea robusta*); bark dyes red and black. (4) Ámlá (*Phyllanthus emblica*); bark, leaves, and fruit dye purple and black; price, two annas per seer (1½*d.* a pound). (5) Hará (*Terminalia chebula*); unripe fruit, used with sulphate of iron, dyes brownish-black. The ripe fruit prepared in a similar manner gives purple-brown and black. (6) Ámaltás (*Cassia fistula*); bark boiled with alum gives a bright red, which may be deepened by adding pomegranate bark; price, nominal. (7) Beherá (*Terminalia belerica*); fruit boiled with *saji* dyes brown and snuff colour; used with iron, yields black and ashy-grey; price, 6 pies per seer (⅜*d.* a pound). (8) Chaili (*Morinda exserta*); bark of root prepared with castor-oil seed, husks of *sargujá*, and lodh leaves, gives a very durable bright red, used for the fringes of the kariás worn by the Kols. (9) Kamala gundi (*Rottlera tinctoria*); hairs from fruit boiled with taj, játámánsi and katchur, dye orange; price, 8 annas per seer (6*d.* a pound). (10) Rangphul (*Bixa orellana*); seeds pounded and boiled with wood-ashes yield a pale yellow, resembling the colour of a China rose. (11) Haldi (*Curcuma longa*); roots treated with sour-milk and alum, dye a pure yellow, which takes a darker tinge if lime-juice or some similar acid be added. The shade of green known as dháni is obtained by mixing a little indigo with the above infusion. Price 3 to 4 seers per rupee (3*d.* or 4*d.* a pound). (12) Harsinhar (*Nyctanthes arbor-trists*); calyx of flower boilded up with the seed dyes yellow. A cloth thus dyed can be coloured red by soaking in a solution of betel-nut and water. (13) Genda (*Tagetes patula*); petals of the flowers dried and boiled with alum, yield a dull green. (14) Champa *Michelia Champaca*), flowers boiled in water dye yellow. (15) Kúsúm (*Carthamus tinctorius*); flowers pounded and mixed with wood-ashes give a rose-red called jaithi. (16) Tun (*Cedrela toona*); flowers treated in the same way as (12) dye red. (17) Kesraj (*Wedelia calendulacea*); root pounded with iron dyes black. (18) Asan chhal

(*Terminalia tomentosa*); bark boiled, dyes black, brown, and buff. (19) Mahuá (*Bassia latifolia*); bark boiled with the bark of mango and jamun dyes red. (20) Palastis (*Butea frondosa*); flowers treated in the same way as (13) dye yellow-red. (21) Babúl (*Acacia Arabica*); bark treated with alum dyes fawn colour. (22) Mendi (*Lawsonia alba*); leaves, pounded into a paste and mixed with lime, are used for dyeing the palms of the hands and soles of the feet red. (23) Dawá-ka-phul (*Grislea tomentosa*); flowers steeped in a solution of alum produce a red dye. (24) Kath (*Acacia catechu*); bark dissolved in alum and water, yields a dull red. (25) Roxi, testa of seed ground up with water, dyes dull red. (26) Giru or yellow ochre, is an earth found in Birú parganá. The same name is applied to a red ochre also found in the form of earth in parganá Korambe.

Section VI.—Trees and plants yielding tans.

The following eight substances are used in tanning:—(1) Dawá-káphul (Grislea tomentosa); (2) Ámlá (*Phyllanthus emblica*); (3) Asan (*Terminalia tomentosa*); (4) Sál (*Shorea robusta*); (5) Hará phal (*Terminalia chebula*; (6 Bahera *Terminalia belerica*); (7) Gáb (*Diospyros embryopteries*); and (8) Kend *Diospyros melanoxylon*).

Section VII.—Uncultivated trees and plants yielding fibres.

The following wild trees and plants yield fibres used in Chutiá Nágpur Proper :—

1. *Bauhinia vahlii.* Vern. *chop*, a creeper. The under-bark is stripped and largely used as a rope-fibre for house-building and various other purposes. The making of chop-ropes is usually the work of the Birhors.

2. *Pollinia eriopoda.* Vern. *khatjoor* or *sabai.* Beng. *bábui*, a grass. A valuable grass made into ropes used for weaving the cushions of bedsteads and for various other purposes. There is no export of this grass from Chutiá Nágpur, although it is extensively used in Calcutta as a material for paper-making.

3. *Agave americana.* Vern. *morábá.* This gregarious plant is grown as a fence round gardens. The long thick leaves yield a fibre occasionally made use of. The leaves are either rotted in clay and then the pulp washed away, or the green pulp is first beaten out and the fibre extracted after being steeped in water for a few days.

The bark of the following trees and plants is stripped and made into ropes, all of which are collectively known as *chop* :—

4. *Sterculia villosa.* Vern. *udal*, a large tree.
5. *Butea frondosa.* Vern. *parás*, a large tree.
6. *Terminalia tomentosa.* Vern. *asán*, a large tree.
7. *Sponia politoria.* Vern. *kháksi*, a large tree.
8. *Ficus cunia.* Vern. *porho*, a large tree.
9. *F. bengalensis.* Vern *bar*, a large tree.
10. *F. anfectoria.* Vern. *phutkal*, a large tree.
11. *Hibiscus tiliaceous.* Vern. *bankápás*, wild cotton.
12. *Sterculia urens.* Vern. *keonjhi*, a large tree.
13. *Helicteres isora.* Vern. *borsa*, a large tree.
14. *Ficus religiosa.* Vern. *jitiápipar*, a large tree.
15. *Careya arborea.* Vern. *kunbhir*, a large tree.
16. *Bauhinia purpurea.* Vern. *koinar*, a village tree.
17. *Legerstromea parvifolia.* Vern. *sidá*, a large tree.
18. *Ventilago calyculata.* Vern. *deoserai*, a creeper.
19. *Pueraria tuberosa.* Vern. *lálparás*, a creeper.
20. *Grewa tiloefolia.* Vern. *dháman*, a tree.

APPENDIX I.

Jurisdictions.

(1) Area and boundaries—*vide* Chapter I, page 1.

(2) Subdivisions—Lohárdagá is the sudder subdivision of the district of that name; the only other subdivision of the district is Palámau.

(3) Fiscal divisions—Lohárdagá subdivision has only been surveyed topographically, and no return of the area of each fiscal division is available. There are 40 fiscal divisions or parganás, which may be classified in respect of situation as under:—

In the east of the district—(1) Bántáházám, (2) Baragain, (3) Bárándá, (4) Bundu, (5) Jáshpur, (6) Jonhá, (7) Ráhe, (8) Sillí, (9) Sutiámbe, (10) Támár.

In the North—(1) Deorkhond, (2) Tálsá, (3) Torí, (4) Umedendá.

In the centre—(1) Belkádi, (2) Doisá, (3) Khukrá, (4) Lodhmá, (5) Udaipur.

In the South—(1) Báno, (2) Bassiá, (3) Belsián, (4) Bháonrpáhár, (5) Biru, (6) Kesalpur, (7) Láchrá, (8) Sasiá, (9) Sirí, (10) Sonpur, (11) Uperpát.

In the West—(1) Árángí, (2) Árdhe, (3) Bárwe, (4) Karru, (5) Kásir, (6) Kásmár, (7) Korámbe, (8) Noágarh, (9) Pálkot, (10) Pánerí.

APPENDIX II.

METEOROLOGICAL STATISTICS.

Rainfall return of the Ránchí Station from the year 1870.

Month.	1870.	1871.	1872.	1873.	1874.	1875.	1876.	1877.	1878.	1879.	1880.	1881.	1882.	1883.	1884.	1885.	1886.	1887.	1888.
January	0·82	...	...	...	1·36	1·70	...	3·32	0·22	...	0·12	...	...	...	...	0·45	0·25	2·29	1·20
February	0·04	...	1·46	0·04	3·48	1·51	...	3·49	0·61	1·74	3·19	0·38	1·93	0·55	...	1·32	...	...	0·78
March ...	0·22	2·11	0·10	2·59	2·01	...	0·21	1·65	2·21	...	...	2·62	...	3·16	...	1·15	2·60	...	...
April ...	0·52	0·36	1·79	0·50	0·27	1·08	...	2·58	3·12	...	0·28	0·35	0·51	0·47	...	0·42	0·14	0·66	...
May ...	0·48	3·40	1·62	1·21	1·38	4·63	0·90	3·10	4·93	1·95	3·35	0·47	5·25	2·16	2·74	0·97	4·90	14·49	2·57
June ...	12·49	14·75	10·54	2·26	6·37	8·04	8·52	6·95	2·95	5·40	6·40	10·05	8·64	13·49	8·15	11·24	7·24	12·42	3·05
July ...	11·17	12·84	10·34	17·58	11·13	19·29	23·78	6·19	9·79	10·28	10·17	17·84	15·81	20·43	14·75	14·27	11·67	11·28	18·96
August ...	15·08	14·29	9·00	12·93	16·92	12·97	12·96	25·21	11·65	15·12	15·14	16·01	13·32	10·01	11·34	16·75	13·90	13·21	20·70
September	9·87	13·86	10·44	12·20	9·85	8·74	6·68	4·62	10·49	10·92	8·05	4·17	12·18	9·46	12·79	6·38	8·92	6·87	7·88
October	2·63	0·30	3·94	0·63	7·39	1·07	7·88	0·33	0·19	3·35	6·44	1·14	4·09	0·28	3·55	0·46	7·53	1·63	0·35
November	...	...	0·24	...	0·09	...	...	0·94	1·03	...	0·43	1·03	0·42	2·09	...	0·06	0·63	...	0·12
December	...	0·14	...	...	...	...	...	1·71	0·85	...	0·04	...	...	0·47	0·12	2·61	...	...	...
Total ...	53·32	61·55	49·47	49·95	60·25	59·03	60·93	60·09	48·04	48·76	53·61	54·66	61·55	62·57	53·44	56·08	57·78	62·85	55·60

Table of Temperature at 10 A.M. *for the year* 1887 *recorded at the Ránchí Observatory.*

Date.	January.	February.	March.	April.	May.	June.	July.	August.	September.	October.	November.	December.
1st ...	74°	72·6	88·6	89°	103·6	91·9	89·7	83·5	85·5	86·7	78°	75·4
2nd ...	72·9	68°	88·9	92°	101·5	97·8	86·5	77°	87°	85·7	78·8	73·4
3rd ...	72°	69°	87·9	91·9	98·5	99°	87·5	79·7	84·8	86·7	79°	73·5
4th ...	75·8	73·9	89°	89°	94·8	99·5	82·6	82·6	83·7	86·0	81°	76°
5th ...	77·7	80·6	90·5	90°	89·7	99°	85·5	84°	84°	86·5	79°	74·9
6th ...	77·9	78·6	91·5	94°	89°	94·6	87°	82·6	85·5	87°	78·9	76°
7th ...	79·6	78·7	86·6	96°	94°	98·8	84°	86°	85·6	86·6	78·8	75·9
8th ..	68·8	74·9	86°	93°	98·6	97·8	84·2	80·5	86·9	87·6	80·5	74·7
9th ...	68°	74·5	87°	85°	101·6	96°	83°	78°	88·6	86·9	82·7	75°
10th ...	67·9	66·5	88·8	89·6	102°	98·9	81°	82°	87·8	86·5	82°	74·9
11th ...	71·7	69°	90·8	93·9	95·5	94°	83·5	80·9	87°	85·9	81·9	78·5
12th ...	75·9	71·9	92·6	94·5	97·9	91·6	80·5	82°	80·5	85°	79·9	78·4
13th ...	78·5	76·5	93°	96·5	103·5	85·5	83°	84·8	81·5	81°	79·8	73·9
14th ...	70·5	77·6	93·7	96·7	103·8	82°	84·5	87°	83°	80·5	77·6	74·5
15th ...	65·5	78·8	90·5	97·8	105°	83°	79·5	86°	86·7	81·6	76·5	73°
16th ...	69·8	80°	89°	94°	105·5	82·8	81°	86°	84·8	83·5	78·5	71°
17th ...	69·8	80°	89°	95·7	104°	87°	86·5	86·7	82°	81·2	79°	72·6
18th ...	71·5	77·6	87·7	97·9	103·7	86·6	86·4	85·9	83·9	83°	79·4	71·8
19th ...	73°	79°	86·5	98·5	104°	86·8	85·8	86·8	85·6	82·5	78·4	69·7
20th ...	77°	79·6	87°	99°	104·9	87°	83·5	85·6	87·5	82·6	79·7	71°
21st ...	64·6	81·7	88·5	99·8	104°	81·5	81·8	84°	84·2	82°	79°	69·9
22nd ...	60°	81·5	90·5	100·5	104·9	84°	84°	84·6	83·7	83°	77·5	70·4
23rd ...	61·7	84·5	88·7	100°	104·6	84°	83·5	78°	82·6	82·6	76·9	75·4
24th ...	61°	83°	89°	99·9	104°	86·9	83·5	77·8	83°	82·7	76°	74·8
25th ...	66·8	83·9	90·5	100·4	102·5	89·7	84·5	81°	80·5	83°	74°	73·7
26th ...	74°	86·8	93·7	102·6	95·5	83·8	81·6	86°	85·2	81·6	74°	73·7
27th ...	75°	85°	94°	103·7	73·8	80°	84·8	86·7	84°	81·6	74·7	71·7
28th ...	66·7	86°	92·5	105·5	77·5	91°	85·7	83·9	85·2	80·9	75·5	65°
29th ...	70·6	.....	95·4	105°	83·5	89°	82°	84°	85°	79·9	75·8	72·7
30th ..	75°	.....	96°	101·8	87·4	87·5	81·5	84·5	85·9	79°	76·4	73°
31st ...	72·7	.....	96·8	.....	92°	.....	84·9	84·9	.....	76·6	.....	74·4

Table of Barometric Pressure at 10 A.M. *recorded at the Ránchí Meteorological Observatory for the year* 1887.

Date.	January.	February.	March.	April.	May.	June.	July.	August.	September.	October.	November.	December.
1st ...	28·002	27·834	27·766	27·892	27·776	27·650	27·630	27·592	27·754	27·890	27·908	28·016
2nd ...	27·958	27·804	27·808	27·950	27·728	27·586	27·642	27·568	27·768	27·894	27·912	27·982
3rd ...	27·962	27·892	27·918	27·954	27·692	27·684	27·750	27·658	27·710	27·858	27·978	27·990
4th ...	27·960	27·858	27·862	27·916	27·754	27·662	27·602	27·682	27·604	27·860	28·020	28·026
5th ...	27·928	27·868	27·796	27·908	27·866	27·608	27·624	27·628	27·750	27·834	28·024	28·010
6th ...	27·956	27·856	27·844	27·934	27·840	27·576	27·566	27·656	27·836	27·838	27·956	28·005
7th ...	27·898	27·854	27·836	27·896	27·780	27·608	27·576	27·676	27·850	27·890	27·950	28·042
8th ...	27·904	27·916	27·834	27·876	27·754	27·658	27·572	27·614	27·840	27·946	27·964	28·024
9th ...	27·910	27·972	27·906	27·886	27·686	27·672	27·550	27·616	27·762	27·958	27·966	27·990
10th ...	27·982	28·038	27·854	27·882	27·684	27·642	27·424	27·634	27·640	27·950	27·968	27·970
11th ...	27·986	28·090	27·848	27·884	27·750	27·608	27·404	27·682	27·534	27·880	27·954	27·964
12th ...	28·006	28·056	27·862	27·850	27·678	27·650	27·474	27·738	27·608	27·866	27·992	27·996
13th ...	28·012	28·036	27·886	27·828	27·612	27·576	27·406	27·736	27·706	27·870	27·902	28·016
14th ...	27·972	28·090	27·904	27·854	27·644	27·522	27·476	27·706	27·642	27·898	27·924	28·024
15th ...	27·956	28·104	27·856	27·878	27·694	27·534	27·662	27·684	27·582	27·950	27·950	28·005
16th ...	27·942	28·002	27·884	27·864	27·742	27·566	27·708	27·716	27·630	27·936	27·944	27·988
17th ...	27·924	28·044	27·922	27·848	27·750	27·558	27·774	27·748	27·738	27·926	27·938	28·032
18th ...	27·896	28·028	27·932	27·848	27·736	27·564	27·676	27·668	27·756	27·904	27·980	27·992
19th ...	27·844	28·034	27·928	27·792	27·756	27·586	27·604	27·654	27·730	27·902	28·056	27·988
20th ...	27·788	27·998	27·926	27·806	27·740	27·564	27·568	27·622	27·712	27·962	28·056	27·932
21st ...	27·808	27·984	27·926	27·786	27·694	27·614	27·596	27·604	27·716	27·984	28·028	27·906
22nd ...	27·794	27·942	27·906	27·756	27·656	27·644	27·594	27·606	27·758	27·978	28·054	27·966
23rd ...	27·872	27·896	27·898	27·828	27·668	27·664	27·566	27·604	27·728	27·956	28·062	27·990
24th ...	27·846	27·888	27·896	27·880	27·666	27·706	27·508	27·682	27·728	27·958	28·024	27·984
25th ...	27·836	27·818	27·898	27·950	27·668	27·712	27·472	27·724	27·744	27·988	28·018	28·016
26th ...	27·772	27·874	27·854	27·872	27·486	27·688	27·536	27·706	27·756	27·976	28·034	28·038
27th ...	27·840	27·838	27·784	27·786	27·468	27·660	27·586	27·614	27·820	27·978	28·026	28·046
28th ...	27·856	27·738	27·784	27·762	27·616	27·668	27·530	27·656	27·842	27·976	27·996	28·028
29th ...	27·718	.....	27·734	27·718	27·674	27·682	27·534	27·690	27·878	27·986	28·010	28·005
30th ...	27·804	.....	27·808	27·768	27·704	27·650	27·612	27·744	27·880	27·968	28·038	28·014
31st ...	27·816	.....	27·894	.....	27·678	.....	27·610	27·766	.....	27·958	.....	28·032

Table of Wind Directions at 10 A.M., *recorded at the Ránchí Observatory for the year* 1887.

Date.	January.	February.	March.	April.	May.	June.	July.	August.	September	October.	November.	December.
1	S	NW	NW	NW	SW	WSW	NW	NW	S	NW	NE	N
2	NW	W	Calm.	NNW	S	SW	Calm.	WSW	SSW	NW	ENE	N
3	NNW	NW	Calm.	Calm.	SSW	S	SE	WSW	WSW	NNW	NE	E
4	WNW	SSW	NW	W	Calm.	WSW	ENE	W	SW	N	ENE	Calm.
5	WNW	NW	NW	SW	SE	NNW	Calm.	Calm.	Calm.	N	ENE	NW
6	NW	SE	NW	S	SSE	SW	ENE	W	Calm.	Calm.	Calm.	Calm.
7	SW	NW	SE	SW	SW	NNW	S	W	Calm.	ENE	Calm.	Calm.
8	NW	NW	SSW	S	SW	Calm.	NW	SW	NW	ESE	N	NW
9	W	WNW	SW	Calm.	SW	NW	W	WSW	NW	SSW	NW	Calm.
10	S	NW	SSW	S	NNW	N	Calm.	Calm.	N	SSW	NW	N
11	SW	N	S	SW	NW	SE	SW	SE	NE	Calm.	NW	WNW
12	SW	NW	NNW	S	S	E	WSW	SE	ESE	SE	NW	WNW
13	SSE	NNW	S	NW	WSW	E	NE	SSW	E	SE	NE	Calm.
14	W	NW	NE	SW	NNW	SSE	ESE	SSW	ESE	S	NNW	NNW
15	NW	NW	SE	Calm.	WNW	S	S	SE	SE	N	N	N
16	W	WNW	SW	Calm.	NNE	W	WSW	ESE	NNE	NW	SSW	Calm.
17	SW	NW	N	SW	N	WNW	NW	SSE	SW	NW	Calm.	NNW
18	SSW	NW	NNW	N	NW	NW	NW	SE	S	NNW	ESE	NNW
19	S	NW	NW	W	N	ENE	NNW	E	W	SE	ESE	N
20	Calm.	NW	NW	N	Calm.	WNW	Calm.	SSE	NNW	Calm.	E	NW
21	S	NNW	NNW	NW	SSE	SSW	N	E	NNW	E	NE	NNW
22	WNW	NW	NNW	N	S	SW	E	ESE	N.	ENE	Calm.	Calm.
23	NW	NW	NNW	WNW	NNE	W	ENE	SSE	NW	NNW	NE	NW
24	W	Calm.	NW	W	N	NW	NE	SW	NW	N	N	N
25	S	W	S	S	SE	SW	E	SSW	W	NW	ENE	NNW
26	SW	NW	SE	SW	NNE	SW	SSW	NW	NNW	Calm.	Calm.	NW
27	N	SSE	S	SW	SW	W	W	N	NNW	NNW	N	NW
28	NW	W	W	NW	WSW	SW	Calm.	ESE	NNW	N	NNE	NW
29	SW	.....	S	WSW	SSW	Calm.	SW	SSE	NW	NE	NE	NW
30	NW	.....	ENE	SSW	SW	WSW	SW	S	Calm.	NE	E	W
31	NW	.....	E	.....	WSW	.....	W	SSW	.....	ENE	.....	W

APPENDIX III.

Statistics of Population.

Population according to early records.—The first attempt at an estimate of the population of Chutiá Nágpur Proper was made by Captain DePreé at the time of the topographical survey of the subdivision. One hundred and twenty-eight houses in different villages, belonging to men of different castes, were taken at random, and the total number of inmates was found to be 811, yielding an average of 6·34 persons per house. The number of houses ascertained by the survey was then multiplied by the factor thus obtained, and a total population of 881,995 souls was arrived at for Chutiá Nágpur Proper, exclusive of parganá Torí. Taking the area of the subdivision, exclusive of Torí, at 7,120 square miles, the foregoing figures disclosed an average of 123·9 inhabitants to the square mile. It was assumed that the average would equally apply to Torí, and taking the area of the latter at 664 square miles, a total population of 964,264 souls was arrived at for the entire subdivision.

An experimental census was taken in 1869 by the Deputy Commissioner, and the population was returned at 1,396,471 persons for the whole district

including Palámau. This gave an average density of 122·4 inhabitants to the square mile—which was only 1·5 less than the average arrived at by Captain Depní.

Population according to census of 1872.—The first regular census of the subdivision was taken in 1872. On account of the sparseness and ignorance of the population, the enumeration could not be simultaneous, but was carried out gradually by a special salaried agency. Although the census was at the time considered to be fairly accurate, it is now believed that a considerable number of people escaped enumeration. The population of the subdivision was returned at 870,604 souls, living in 3,819 villages and inhabiting 172,124 houses. Taking the area of the subdivision at 7,784 square miles, the number of persons to the square mile was found to be 112. The number of persons per village was likewise found to be 228, and per house to be 5·1.

Census of 1881.—The last census of 1881 was synchronous, and is believed to have been very accurate. The total population of the subdivision was returned at 1,124,422 souls, the number of villages at 9,271, and the number of houses at 210,129. These give a density of 144 persons to the square mile, and 5·42 persons per house. The following table will show the area, population, and its density per square mile for each of the 13 police circles of the subdivision :-

Police Circle.	Area in square miles.	Total population.	Persons per square mile.	Remarks.
1. Ránchí	566 672	140,595 144,723	248·40 215·36	The lower figures are revised with reference to Government notifications dated 3rd December 1883 and 19th February 1884, sanctioning there-arrangement of the Thannah jurisdictions in the sudder and Palámau subdivisions of Lohárdagá. The upper figures only will be considered when comparing them with those of 1872.
2. Sillí	308 323	68,335 68,335	221·87 221·56	
3. Támár	588 616	95,696 93,454	162·75 151·71	
4. Kárrá (Lodhmá) ...	380 481	67,988 108,474	178·92 225·52	
5. Mándár (Choriá) ...	320 372	56,220 66,655	175·69 179·18	
6. Khuntí (Torpá) ...	627 559	104,140 96,593	166·09 172·80	
7. Bálumat	672 639	66,253 66,253	98·59 103·68	
8. Chainpur (Bárwe) ...	578 635	51,080 53,791	88·37 84·71	
9. Toto (Karámbe) ...	473 573	89,078 98,488	188·33 171·88	
10. Lohárdagá	729 621	122,023 109,530	167·38 176·38	
11 Pálkot	826 574	108,719 64,347	131·62 112·10	
12. Kochedegá (Biru) ...	877 877	66,061 63,368	75·38 72·26	
13. Bassiá	860 862	88,234 90,411	102·60 104·88	
Total ...	7,804	1,124,422	144·08	

It will be observed that the two circles showing the densest population are Karrá, Sillí and Ránchí, occupying the east—centre and the extreme east of the subdivision. The latter immediately adjoins the district of Mánbhum. The next densest *thannahs* are Mándár, Lohárdagá, Khuntí and Toto, all occupying the centre of the subdivision. The remaining police circles show sparser population, and are all situate on the outskirts of the subdivision. It may be said that the farther is any police circle from the centre, the less dense is its population, and *à priori*, the more jungly it is. Thus Biru, which occupies the extreme south-west, and is farthest from the centre of the subdivision, is the least populated. In fact it has been characterized as one vast continuous sheet of jungle.

Increase of population from 1872 *to* 1881.—The following figures show in a concise form the population and density in each of the two years 1872 and 1881 :—

	Population.	Density.
1872	870,604	112
1881	1,124,422	144
Increase in nine years	253,818	32
Percentage of increase on population of 1872 ...	29·1	

The increase of 29·1 per cent. is *primâ facie* incredible, although there is no doubt that the population of the subdivision has been steadily increasing at a higher rate than in many other parts of Bengal, as is evidenced by the gradual spread of cultivation in Chutiá Nágpur. With reference to the accuracy of the figure showing the increase of population, the comments of Mr. Bourdillon, the Census Compiler of 1881, are appropriate. Speaking of the Chutiá Nágpur Division, he says :—" If the figures of the census of 1872 are correct, there has been an increase in these districts which implies a fertility of which the human race has hitherto not been considered capable, or an immigration which has no parallel except in the history of Californian townships. In reality the facts as to immigration are the other way. It is notorious that these districts are the great recruiting grounds for cooly emigrants to all parts of Bengal and Assam, to the West Indian Islands and the Mauritius..... From Lohárdagá, during the years 1872 to 1881 the emigrants under Act VIII (B C.) of 1873 were 43,490, and the Deputy Commissioner reports that free emigration is largely increasing, and that emigration under the Act is now but a fraction of what it was two years ago."

The increase of population in the 9 years 1872 to 1881 is shown in the following statement for each of the police circles of the subdivision :—

THÁNÁH.	Total population.		Increase.	Percentage of increase.	REMARKS.
	1872.	1881.*			
Ránchí	116,426	140,595	+ 24,169	20·76	* The figures for population in 1881 refer to the *thánáh* jurisdiction before their re-arrangement in 1883-84. The revised figures for 1884 do not admit of comparison with those of 1872, as the present limits of the jurisdiction no longer correspond with those of the latter year.
Sillí	54,524	68,335	+ 13,811	25·33	
Támár	75,077	95,696	+ 20,619	27 46	
Kárra	63,607	67,988	+ 4,381	6·89	
Mándár	50,648	56,220	+ 5,572	11·00	
Khuntí	78,660	104,140	+ 25,480	32·39	
Bálumat	54,078	66,253	+ 12,175	22·51	
Chainpur	32,837	51,080	+ 18,243	55·56	
Toto	70,479	89,078	+ 18,599	26 39	
Lohárdágá	93,261	122,023	+ 28,762	30·84	
Pálkot	79,999	108,719	+ 28,720	35·90	
Kochedegá	38,782	66,061	+ 27,279	70·34	
Bassiá	62,226	88,234	+ 26,008	41·80	
Subdivisional total ...	870,604	1,124,422	+ 253,818	29·15	

It will be observed that the largest increase was generally speaking in the least populous police circles, *e.g.*, Kochedegá (Biru), Chainpur (Bárwe), and Bassiá. The enormous increase in case of Biru was due partly to the continuous influx of settlers from the central parganás of the subdivision, but largely, I believe, to extremely defective enumeration in 1872. From enquiries made previous to the Census of 1881, it appears that whole villages did not find place in the enumerators' lists, and the wilder tribes escaped enumeration by fleeing into the jungles.

Division of the people in respect of religion.—The following statement shows the distribution of the population in each thannah of the subdivision according to religion :—

THÁNÁH.	Hindus.	Mahommedans.	Kols and other aborigines.	Christians.	Others.	Total.
Ránchí	59,942	12,700	65,688	2,264	1	140,595
Sillí	50,500	621	17,161	53	...	68,335
Támár	42,363	400	50,522	2,820	91	95,696
Kárrá	15,938	1,712	48,115	2,163	60	67,988
Mándár	21,534	3,418	29,878	1,231	159	56,220
Khuntí	29,463	606	55,546	18,525	...	104,140
Bálumat	47,801	2,849	15,603	...	..	66,253
Chainpur	16,407	533	34,140	...	...	51,080
Toto	22,651	2,180	64,110	137	.	89,078
Lohárdagá	36,270	7,148	77,569	980	56	122,023
Pálkot	45,274	1,142	60,559	1,744	...	108,719
Kochedegá	28,455	434	37,172	.	...	66,061
Bassiá	42,686	564	38,138	6,846	...	88,234
Total ...	459,284	34,307	594,201	36,263	367	1,124,422

* In 1872, the area of the Subdivision was shown as 7,784 square miles; in 1881 as 7,804 square miles. Thi difference should be taken into account.

Regarding the percentage of each of the four religious divisions of the people on the total population of each thannah in the subdivision, *vide* page 6 in the section on agricultural population.

Urban population with list of chief towns.—The Census of 1881 distinguishes only two towns in the head-quarters subdivision of Lohárdagá, viz. Ránchí, having a population of 18,443 souls, and Lohàrdagá, having a population of 3,461 souls. The population of Lohárdagá, and of several other big villages, among which I may mention Bundu, Támár, and Pálkot live a mixed rural and urban life. At Bundu, there is a considerable number of Bengalees (chiefly from Bánkurá) engaged in the lac industry. With the exception of these people and their dependents, I know of few *mahájans* or merchants and artizans, &c., in the subdivision outside of Ránchí, who do not cultivate some land on their own account and live a strictly urban life.

APPENDIX IV.

Areas of Cultivation.

The whole subdivision has not yet been cadastrally surveyed. Exact information on this head is therefore not available. In the Return XLIB of 1874 now abolished) the total area of the subdivision used to be shown as 7,784 square miles, and the total area of cultivation as 3,957 square miles, or 50·8 per cent. of the total area. How the latter figures were obtained I am unable to determine. At any rate the estimate was much above the actual state of cultivation.

Only those villages which are in the immediate possession of the Mahárájá of Chutiá Nágpur have been cadastrally surveyed. They are 348 in number, having a total area of 684 square miles, or roughly $\frac{1}{12}$th of the area of the entire subdivision. These villages are scattered all over the subdivision, but mostly situated in the central parganás, and may be regarded as typical of the well-cultivated section of the country, included in the central parganás of the subdivision. The total area of cultivation in these villages is 213,318 acres, or 48·7 per cent. of the total area. This percentage may be considered fairly accurate for the central parganás, but too high for the entire subdivision. It may not be unreasonable to assume that the conditions of cultivation remaining the same, the proportion of cultivated land to total area varies with the density of population; thus, if one parganá, for instance, contains twice as many people per square mile as another, the proportion of cultivated land in the former may be accepted as double that of in the latter. The density of population in the 348 villages settled by Mr. Slack was found to be 223 persons per square mile; and that for the whole subdivision to be 144 per square mile. Reasoning on the above principle, the percentage of the cultivated area on the total area of the subdivision is obtained from the following equation:—

223 : 144 = 48·7 :—(percentage required).

The percentage of cultivated area thus appears to be 31·4, and taking the total area of the subdivision to be 7,804 square miles, the absolute area under cultivation is found to be 2,450·5 square miles.

The figures usually shown in the district reports are as below:—

	Sq. miles.
Cultivated	3,957
Culturable waste	998
Unculturable waste	2,829

The figures supplied by me should be, for reasons already given, considered as more approximately correct than the present district figures, which certainly show the area of cultivation at a much higher figure than can be actually the case.

As regards areas under each of the important crops of the subdivision, I beg to refer to page , Chapter III.

APPENDIX V.

STATISTICS OF RATES OF RENT.

(1) *Rates of Rent.*

Owing to there being no standard land measures, it is extremely difficult to ascertain the rates of rent prevailing in the subdivision. By the custom of the country, rent is usually assessed only on the lowlands, and each ráyat holding a certain quantity of lowland (*don*), and paying rent for it, is allowed to cultivate a variable quantity of upland (*tánr*). Even if the ratio between the lowland and the quantity of upland attached to it were invariable, it would still be extremely difficult to distribute the rent of the holding between the two. The following statement will show the rates of rent in several villages per acre of low-land, it being always understood that they include certain quantities of upland along with the lowland which forms the basis of assessment:—

	Rs.	A.	P.
Ankrá (Bassiá)	1	8	0
Dántiá (Sonpur)	1	8	0
Pálkot (Pálkot)	2	4	0
Biru (Biru)	1	8	0
Kutumbá (Doisá)	2	0	0
Ráhe (Ráhe)	2	4	0

I arrived at the above rates in the following manner:—First of all, I enquired about the rate of rent in the village per local land measure, which was either *páwá*, *ánná* or *kát*. Then I ascertained how many maunds of seed were required to sow one unit of the particular land measure. Then, calculating on the formula that one acre of lowland required one maund of paddy seed, I arrived at the equivalent in acres of the local land measure.

The above rates are much exceeded in large villages owing to competition among Hindu settlers. Thus at Bundu the rate is between Rs. 4 and Rs. 5 per acre, while for *tewán* lands, so much as Rs. 8 is frequently paid. Higher rates of rent are also paid in the well-cultivated country round the head-quarters station of Ránchí.

Up-lands held on *máswar* tenure, that is, separately from lowlands, usually pay rent in kind, which is the same as the quantity of seed required to be sown.

Rates of rent in Government villages.—There are three Government estates, Barkágar, Páttiá and Seelám. These contain 119 villages in all. The Barkágar villages are all situated within 12 miles of Ránchí; the Páttiá villages in the western part of pergunnah Doisá; Seelám contains only one village in the extreme west of the subdivision. All these villages were settled by Captain Grey in the year 1880. The rates of rent determined by him were slightly above those prevailing in the neighbourhood; but considering that the ráyats were exempted from all manner of illegal cesses, not to speak of *bet begári* or forced labour, which the ráyats of zamindári villages are called upon to deliver, Captain Grey's rates, as given below, can be considered as very fair and as nearly as possible representing the actual rates prevailing in the sub-division. The following statement shows the rates of rent per acre in several typical Government villages:—

Village.	Parganá.	Lowland.			Upland.		
		1st class.	2nd class.	3rd class.	1st class	2nd class.	3rd class.
		Rs. A. P.	Rs. A. P.	Rs. A. P.	Rs. A. P.	Rs. A. P.	Rs. A P.
1. Háttiá ...	Udaipur ...	3 0 0	2 8 0	2 0 0	0 5 0	0 3 0	0 2 0
2. Hotwár ...		2 8 0	2 0 0	1 8 0	0 4 0	0 3 0	0 2 0
3. Látmá ...		2 0 0	1 8 0	1 0 0	0 3 0	0 2 0	0 1 0
4. Rámpur ...		1 12 0	1 8 0	0 12 0	0 4 0	0 3 0	0 2 0
5. Hahap ...		1 4 0	0 14 0	0 10 0	0 3 0	0 2 0	0 1 0
6. Kátámáti ...		1 12 0	1 4 0	0 12 0	0 4 0	0 2 0	0 1 0
7. Konká (Ránchi)		4 0 0	3 8 0	3 0 0	0 7 0	0 5 0	0 3 0
8. Páttiá ...	Doisá ...	2 0 0	1 8 0	1 0 0	0 3 0	0 2 0	0 1 0
9. Koldá ...	Do ...	1 8 0	1 0 0	0 8 0	0 3 0	0 2 0	0 1 0
10. Seelam ...	Pálkot ...	1 4 0	0 12 0	0 4 0	0 3 0	0 2 0	0 1 0
Average ...	.....	2 1 6	1 10 3	1 2 3	0 4 0	0 2 6	0 1 6

Enhancement of rent.—Rents are being rapidly enhanced all over the country. Enhancement of rent is due to many causes, one of which is the law of economy that rent must rise with the price of agricultural produce. Apart from this, competition has raised rent in those villages in which the Hindu immigrants from Behar have largely settled In the section on indebtedness, I have said that a considerable portion of landed property has passed from the hands of the original proprietors to those of the money-lending class. These latter people are proverbially avaricious and grasping. Whenever any village comes in their possession, the first thing they do is to enhance the rates of rent either by increasing them absolutely, or by keeping them nominally the same, and diminishing the size of the local land measure; and often by doing both at the same time. Thus I found in a village near Pálkot, which has recently passed into the hands of a rich money-lender, that land which formerly used to pay Rs. 3-8, has been now paying Rs. 7-6. The consequence has been that several ráyats have fled from the village, and their holdings have been, or will shortly be, annexed to the landlords' own cultivation. Instances of such oppression are, I believe, common all over the country, although most ráyats are afraid to own it for fear of invoking the displeasure of their landlords.

Rents have also been enhanced in villages held by *ticcádárs* or temporary lease-holders, who are equally if not more grasping than the money-lenders. The ticcadar having no permanent interest in the village, tries by every means to screw as much out of the ráyats' pockets as he can; in fact such is the sole and accepted motive of taking a village on *ticcá*

(2) *Ábwábs.*

There are numerous *ábwábs* (*rakumats* or cesses as they are also called), some or others of which are always levied by landlords from their tenants. These *ábwábs* are very various in their nature; some are paid in cash, others in kind; some are apportioned on land, others per house, plough, &c. The following are commonly met with:—(1) *Dassáin beheri* (lit. *dasahará* subscription), at the rate of 2 to 4 annas per páwá or ánná, or 2 annas per house; it is meant for the purchase of buffaloes and goats given by the iláquádárs to the Maharájá at each *dasahará*. (2) *Dassáin salámi*, often levied along with *Dassáin beheri*, and is about the same in amount. (3) *Dâkmásahorá* and *bárdoach*, levied in some villages; the first is a collection for the district zamindári post; the second is a contribution towards the maintenance of police. (4) *Ghátwári*, a contribution at the rate of 2 to 4 annas, per *ánná* or *páwá* towards the maintenance of *ghátwáls* at hill passes. (5) School and other miscellaneous contributions. (6) *Báttá* or exchange at 1 anna per rupee, the old silver coin in which rent used to be paid being equivalent to 17 annas in modern currency. (7) Stated quantities of various agricultural produce, the chief being *urid*, cotton, upland paddy, *til*, *sarguzá* apportioned on land, and *ghee*, oil, thatching-grass, rafters and bamboo, apportioned per house. These ábwábs seem to be popular, and form in fact a portion of rent; all the preceding *ábwábs* being meant to enable the landlord to meet demands of his superior landlord. *Ghee* is collected only in jungly villages where almost every ráyát keeps a number of cows which he is allowed to graze in the village jungle in consideration of a yearly tribute of *ghee*. Where, however, the *áhir* has the charge of the village herd, it is he who makes the payment (*vide* Village Officials, p. 30). (8) *Jhiká* and *mangal bakrá* (*vide* S. A., p. 381, vol. XVI), small contributions by ráyats for the purchase of goats by the landlord at the *dasahará*. (9) Receipt-fees, at 1 or 2 annas per each receipt given for rent. The custom of giving receipts of rents to ráyats is limited only to a few estates, although they are by right entitled to them free of charge. (10) Road and Public Works cesses. These cannot be properly called *ábwábs*, by which illegal cesses are usually meant. Zamindárs, however, exact these cesses from ráyáts at the rate of 1 anna per rupee instead of ½ anna, which is the rate sanctioned by law. Ráyáts do not yet see the propriety of their paying the cesses at ½ anna rate, while their landlords have themselves to pay at 1 anna. Under this misconception, which the wily zamindárs do their best to foster, the ráyats seldom raise objection to the enhanced rates, which they pay without demur. Instances in which the cesses have been and are still levied at 1½ anna per rupee are not uncommon. It is only right to mention here that the Mahárájá of Chutiá Nágpur levies the cesses at the legal ½ anna rate from ráyats of his *khalsa*

villages. In the Government estates of Barkágar, Páttiá and Seelám, and, in the Wards' and Encumbered Estates under Government management the levy of enhanced cesses is of course out of the question. (11) *Baithâwan* (*lit.* advance). The landlord advances small amounts to the Mundá, Máháto or Páhán of the village, in return for which the latter is bound to deliver various agricultural products (the commonest being *ghee*, rice, *urid* and cotton) at nominal customary rates. Thus for every rupee so advanced the village has to give 5 seers of ghee, or 2 maunds of cleaned rice, or like quantities of other articles. The amount of advance is distributed among the ráyats, but considering that they are called upon to deliver articles at nearly a quarter of their market prices, the exactions under the head of *baithâwan* press heavily on their limited resources. (12) To these must be added *betbegári* or personal service Each *chatisá* ráyat is bound by the custom of the country to give three days' ploughing, three days' digging, three days' planting, three days' cutting and one or two days' threshing and storing the grain. The Hindus do not give the three days of digging. Aboriginal ráyats are further bound to carry burdens of their landlords for a certain number of days in the year, and, when a landlord lives at a distance from the village, to carry the produce of his *mánjhihas*, or home farm, to his house.

The above represent the usual *ábwábs* paid by *chatisá* ryots. Those paid by *Bhuinhárs*, *Utakar* ráyats, *Korkar* holders, &c., has been mentioned in the Chapter on Land Tenures. In many of those villages where the Beharis have largely settled, all the *ábwábs*, including *praedial* services, have been consolidated into a fixed rate per rupee of rent—usually 4 annas.

With a view to show the relative proportion of rent and the *ábwábs* incidental to it, I beg to reproduce the following examples:—

Ex. 1.—Village Ankrá, parganá Bassiá—

Rent of one *ánná* of land		Rs. 4
Ábwábs—	As.	
1 Kát of upland paddy	10	
16 *pailas* of *gondlí*	4	
12 *pailás* of upland rice	6	
12 *pailás* of *urid*	6	
Road and Public Works Cesses	4	
Dassáin beheri	2	?
Total ...		Rs. 2

Thus in this village *ábwábs* form one-third of the total demand on a holding. The usual amount of *bet-begári* is also given.

Ex. 2.—Village Bengroo, parganá Pálkot—

Rent of one *ánná*		Rs. 5
Ábwábs—	As	
Ghátwári	2	
Road and Public Works Cesses	5	
Receipt charge	2	
6 pailás of *Urid*	3	
1 seer of Cotton	6	
Total ...		Rs. 1-2

Besides as much *bet-begári* as is needed by the landlord for the cultivation of his home-farm.

Ex. 3.—Village Kutumbá, parganá Doisá—

Rent for one *ánná*		Rs. 4
Ábwábs—	As.	
Báttá or exchange	4	
Road and Public Works Cesses	2	
Dassáin beheri	4	
Biáthâwan (ghee 13½ chittacks, *urid* 6 *pailas*, paddy 10 *pailas*, oil 1 seer): difference of value (roughly) ...	11	
Total ...		Rs 1-5

Besides the following *bet*:—three days' ploughing, three days' digging, three days' transplanting, three days' weeding, three days' reaping, and the necessary threshing and storing the grain. During reaping and transplanting, the working ráyats are given an allowance of food at the rate of two *pailás* of paddy per head per diem. It must be said to the credit of the zamindár (the Bara Lál of Pálkot) that he levies the cesses at the legalized rate of half anna per rupee of rent, unlike most of his fellow land-owners.

Ex. 4.—Village Edolhátu, parganá Bundu—

Rent of one *kat* of land		Rs. 2
A'bwábs—	As.	
Jamá beheri	4	
Báttá	2	
Road and Public Works Cesses	2	
4 *pailás* of Til	4	
8 *pailás* of Paddy	2	
2 *pailás* of Rice	1	
1 *páwá* of Ghee	2½	
Miscellaneous, in all 3 annas 9 pie per ráyat (say) one anna per *kát*	1	
Total ...		Rs. 1-2-6

Besides the following *bet-begári*:—five days' ploughing, one day's digging, one day's reaping, one day's threshing, and one day's storing grain.

Ex. 5.—Village Mundár, parganá Khukrá—

Rent of one *páwá* of land		Rs. 3-8
A'bwábs—		
Dassáin beheri—	As.	
Buffaloes 2 annas, Goat ½ anna } per *páwá*	2½	
Road and Public Works Cesses at 1½ anna per rupee ...	5¼	
Paddy one *kát*	10	
Total ...		Rs. 1-1-9

Besides indefinite *bet-begári* for *mánjhihas* cultivation. Every three or four years, each ráyat has to supply 2 rafters and 25 bamboos, all valued at 4 annas.

The above examples will make sufficiently clear the oppressive character of *ábwábs* in the subdivision. Rents are sufficiently high: in most places higher, I think, than would be allowed under the Bengal Tenancy Act. To these are added a host of *ábwábs* which, exclusive of *bet-begári* and petty nameless demands, range in the aggregate from 4 annas to 9 annas in the rupee. The manner in which the zamindárs have turned the Road and Public Works cesses to their own pecuniary advantage by enhancing the rate from the legalized ½ anna to 1 anna and in some estates to 1½ annas, brings into clear light their avarice, and affords a fresh proof of the rack-renting policy which is being pursued almost everywhere in Chutiá Nágpur. It can be reasonably hoped that as the aboriginal tribes who form the main body of ráyats in the sub-division will come into closer and more extended contact with the outside world, they will learn their own rights which they will not be slow to assert. The revolt of the tenantry of the southern parganás of Sonpur, Sirí, Belsián, Támár and Bassiá, and their refusal to pay *ábwábs* and give *bet-begári*, is only the natural outcome of this gradual enlightenment, which has no doubt received a well-timed stimulus from the teachings of Catholic missionaries.

It may be said that *bet-begári* should not be included among *ábwábs* by which only illegal demands are meant, as it is given by ráyats in consideration of small plots of land which they are allowed to hold rent-free. But I have always observed that such land (called *betkhetá*) is invariably the poorest in the village, and its possible rental is quite out of proportion to the money-value of the labour exacted from the ráyats. The *Mánjhihas* land, for the cultivation of which *bet-begári* is taken, forms from 10 to as much as 25 per cent of the total area of the village paddy lands: so that its cultivation entails no insignificant burden upon the ráyats. Zamindárs will not allow the ráyats to touch their own fields so long as the *mánjhihas* cultivation, for which they themselves and their cattle are detained, is not over; this makes *bet-begári* still more burdensome and odious than it should otherwise be.

Lohárdagá being one of the non-regulation districts, the law which makes the levy of *ábwábs* illegal and punishable does not apply here. It is still held by the law courts of this district that the customary *rakumats*, including *bet-begári*, levied in Chutiá Nágpur, form part of the rent; in disputed cases only those *rakumats* which are proved of long standing are recognized. The recognition of the legality of some of the *rakumats*, however equitable they might be, has, I believe, acted as a shield under cover of which zamindárs levy a host of perfectly illegal cesses. Considering that the levy of these cesses and *bet-begári* has already begun to cause friction between landlords and ráyats, and that so long as any *rakumats* will continue to be considered legal the ráyats will not be secure from excessive demands, it is high time that the levy of any but statutory cesses should be prohibited by legislative enactment, notice being given to zamindárs to consolidate them with rent within a specified number of years.

Operation under the Rent Law.—To enhance or abate rent the provisions of the Rent Law of Chutiá Nágpur (Act I of 1879) are very seldom resorted to. Although illegal extortion of various cesses and *begari*, is but too common, the sufferers are too ignorant and helpless to seek redress in the law courts. The following figures will make it clear that so far as enhancement or abatement of rent and the levy of extortionate demands are concerned, the Rent Law has been of very little help, not because its provisions are inadequate, but because of the general ignorance of the people, their want of means and of the tact of litigation. The zamindárs, who are crafty enough, can always enhance rents with little or no opposition, and so never think of going to court for the purpose.

Suits instituted under the Rent Law—

	1886-87.	1887-88.
Suits of enhancement or abatement of rent	11	3
Suits relating to extortion, restraint	*nil*	7

APPENDIX VI.

STATISTICS OF LAND TENURES.

Neither the cess returns, nor the last Cess Revaluation Report, are found sufficient to furnish statistics of land tenures of the subdivision. Some approximate idea of the relative importance of the various cultivating tenures of the subdivision may be gathered from the figures furnished by the Settlement Report of the Chutiá Nágpur Estate, to which frequent allusions have already been made.

From this Report, it appears that out of 7,804 square miles of country included in the subdivision, the Mahárájá of Chutiá Nágpur, who owns the whole of the subdivision (with the exception of two small parganás, Bántá-Házám and Basantpur, containing about a score of villages), holds only 634 square miles, or roughly $\frac{1}{17}$th of the whole area, in his *khás* possession. The remaining $\frac{10}{11}$ths are held by his numerous *jágírdárs* under various denominations.

The 684 square miles held *khás* by the Mahárájá include 348 villages scattered all over the subdivision. All or most of them contain four classes of cultivating tenures, viz:—

(1) *Bhuinhári* tenure: a proprietary tenure either rent-free or subject to a quit-rent which is fixed for ever.

(2) *Korkar* tenure: an occupancy tenure liable to sale or transfer; rent liable to change. New rice lands prepared by ráyats at their own expense are held on this tenure.

(3) *Mánjhihas and betkhetá tenures.*—The former includes land held in *khás* cultivation by the zamindár (in the Mahárájá's *khálsá* villages, by the Mahárájá himself); and the latter includes land given to ráyats in consideration of *bet-begári*. The zamindár possesses absolute rights over both these classes of land.

(4) *Ráyattí* tenures.—These are of various kinds, viz. *Chatisá* or true occupancy tenure, *utakar*, which is virtually a non-occupancy tenure, &c. At the settlement, all ráyattí lands were, however, assessed in the same way, so that in the Mahárájá's, *khálsá* villages there is no longer any distinction between *chatisá* and *utakar* lands.

The total area of the 348 villages being 684·89 miles, or 437,987 acres, are distributed in the following proportions among the four classes of tenures named above:—

		Acres.
(1)	Bhuinhári	38,719
(2)	Korkar, &c.	5,838
(3)	Mánjhihas and betkhetá	8,599
(4)	Ráyattí	160,162
		213,313
	Remainder consisting of forest waste, house and grove sites, &c.	224,674
	Total ...	437,987

Taking the above figures as the basis of calculation for the whole subdivision, and bearing in mind that a jágírdár occupies the same position in his village as the Mahárájá does in his own *khálsá* villages, we arrive at the following proportions in which the total area of *cultivated land* is divided among the four classes of tenures:—

		Per cent.
(1)	Lands held under Bhuihári tenure	18·15
(2)	" " " Korkar "	2·73
(3)	" " by zamindárs as *mánjhihas or betkhetá* ...	4·03
(4)	" " under ráyattí tenures	75·19

The above percentages apply to the parganás situated on the plateau of Chutiá Nágpur, and not to the Five Parganás and Torí, where the land tenures are all of a different nature from those prevailing on the plateau.

APPENDIX VII.

EDUCATIONAL STATISTICS OF THE AGRICULTURAL POPULATION.

The following statement shows the number of schools of all classess, and of pupils attending them, in the sudder subdivision of the Lohárdagá district for the year 1887-88:—

Classes of Schools.		Number of Schools.	Number of pupils.	Remarks.
High English ...	Government	1	253	
	Aided	.....	.....	
	Unaided	.....	.....	
Middle English ...	Government	.....	.....	
	Aided	3	554	
	Unaided	... ..	.....	
Middle Vernacular ...	Government	4	227	
	Aided	1	109	
	Unaided	.....	.....	
Upper Primary ...	Government	.....	... ..	
	Aided	16	811	
	Unaided	.....	.....	
Lower Primary ...	Government	.....	.....	
	Aided	258	6,729	
	Unaided	107	1,942	
Guru Training ...	Government	3	37	
	Aided	.....	.....	
Elementary schools	... ...	44	287	
Industrial schools	... ...	1	41	
Tols and Maktábs	... ...	9	124	
	Total ...	447	11,124	

It is to the upper and lower primary schools that we should look to for the education of ráyats' children. There were 381 primary schools in the subdivision; these distributed among the 9,271 villages give one school to every

23 villages. It is usual to estimate that 15 per cent. of the male population represents the number of boys of school-going age. The male population of the subdivision as returned in 1881 is 556,372, which at 15 per cent. give 83,455 boys of school-going age. Comparing this number with the number of pupils attending schools of all classes (11,124), we get one boy going to school out of every 7·5 boys eligible for school.

Since the year 1872, primary education has made great progress in the district. Previous to the issue of the Government of Bengal's notification of the 30th September 1872, there were very few schools in the interior of the district, exclusive of those belonging to the S. P. G. Mission. In the whole district there were only eight Government schools, viz. three model schools and five *pátsháláis*. Besides, there were a few indigenous schools (*pátsháláis and maktábs*), but they were not well attended, nor were they meant for the mass of the people. By the end of 1872, 109 *pátsháláis* in the Sudder and 55 in the Palámau subdivision were established. The number of village schools and of pupils attending them have since steadily risen till we have in the year 1887-88 over four hundred primary and elementary schools attended by eleven thousand pupils in the Sudder subdivision.

The usual annual returns of the Education Department do not distinguish the pupils according to the occupation of their guardians. A special return was, however, prepared in the year 1885-86, which supplies the needful information. The return for the Sudder subdivision is reproduced below—

Return showing the number of schools of all classes and of pupils distinguished according to guardians' incomes and occupation for the year 1885-86.

Class of schools.	Number of schools.	Number of pupils.	Of guardians having income of Rs. 5,000 and upwards.	Of guardians with incomes of Rs. 200 to Rs. 5,000 (non-agriculturists).	Poorer classes of the people with incomes less than Rs. 200.						Remarks.
					Agriculture.	Service.	Trades.	Skilled labour.	Common labour &c.	Total.	
High English	1	260	15	176	19	37	10	1	2	69	
Middle English	2	365	...	32	199	86	25	3	20	333	
Do. vernacular	5	336	18	79	88	59	44	19	29	239	
Upper primary	13	748	12	78	403	33	75	43	104	658	
Lower do.	246	6,591	14	460	4,461	119	436	577	524	6,117	
Training schools	2	287	...	1	189	66	2	10	19	286	
Industrial schools	1	24	...	...	6	...	...	4	14	24	
Elementary schools	4	49	...	16	23	...	2	...	8	33	
Maktábs	10	163	10	44	...	34	65	...	10	109	
Total ...	283	8,823	69	886	5,388	434	659	657	730	7,868	

It thus appears that out of 8,823 pupils attending schools of all classes, 5,388, or 60·2 per cent., were recruited from the agricultural class; it is also believed that among the poorer classes of society most of the parents of the 2,480 boys shown under service, trades and labour were more or less intimately connected with agriculture.

APPENDIX VIII.

WEIGHTS AND MEASURES.

Weights.—The weights in use in the subdivision are the following:—

(1) The *Sohrí ser*, so called from being equal in weight to 16 old copper pice equal to one-third of a *pákká* seer of 80 *tolás*. It is in use in the Five Parganás. It is subdivided into 4 *páwás* and 16 *chittacks*.

(2) The *áthási ser*, so called from being equal in weight to 28 old copper pice, equal to half a *pákká seer* of 80 *tolás*. It is in general use nearly all over the subdivision, and is subdivided into 4 *páwás* and 16 *chittacks*; the higher denominations are;—7 *sers* make 1 *paseri*, 8 *paseris* make one *man* or *maund*, which thus equals 28 *pákká sers*.

(3). The *kácchá ser*, usually called the *Báragandi ser*, in use in parganá Torí and all over Palámau. 1 equals 9·6 *chittacks* of *pákká* bazar weight. It is likewise subdivided into 4 *páwás* and 16 *chittacks*; the higher denominations are—6 *sers* make one *paseri*, 8 *paeris* or 48 *sers* make one *man* or *maund*, which thus equals 28 *seers* 12·8 *chittacks* of *pákká* weight.

(4.) The *pákká* or standard *ser*, equal to the weight of 80 modern rupees. Its denominations are:—4 *chittacks* equal 1 *páwá*, 4 *páwás* equal 1 *ser*, 40 *sers* equal 1 *maund*. The use of the standard weights is practically confined to Ránchí.

Measures.—All grain and liquid measures are called *pailás*. There are three different kinds of *pailás*, which are:—(1) the *chhápánahá pailá*, so called from one *pailá*-ful of rice weighing as much as 56 old copper pice, or one standard seer of 80 *tolás*. Its denominations are:—4 *sehrás* equal 1 *pailá*, 20 *pailás* equal 1 *khundí*, 2 *khundís* or 40 *pailás* equal 1 *kát* or *maund*. One *kát* of rice weighs 40 *pákká* seers; but a *kát* of any other grain weighs more or less according to the density of the grain. (2) The *báragandi pailá*, in common use in the sub-division excepting in the central parganá of Khukrá, where the *chhápánahá* and the *sewaiá pailás* are in use. The *báragandi pailá* is so called from one *pailá*-ful of clean rice being equal in weight to 48 old copper pice, or roughly to 14 *chittacks* of *pákká* weight. Like the *chhápánahá*, the denominations of the *báragandi* are as under:—4 *sehrás* equal 1 *pailá*, 20 *pailás* equal 1 *khundí*, 2 *khundís* equal 1 *kát*. One *báragandi pailá* of rice will weigh about 14 *chittacks* or 70 *tolás*. The weight of one *pailá*-ful, of other grains are:—paddy, 56 *tolás*; sarguzá, 60 *tolás*; máruá—68 *tolás*; sarsan, 64 *tolás*; urid, 77 *tolás*; kurthi, 78 *tolás*; til, 59 *tolás*. (3) The *sewáia pailá*, so called from one *pailá*-ful of clean rice weighing $1\frac{1}{4}$ times the *átháisi ser*, that is, $1\frac{1}{4} \times 8$ *chittacks* equal 10 *chittacks* of *pákká* weight. The *sewáia pailá* is used only in limited areas. Its denominations are:—20 *pailás* equal 1 *khundí*; 2 *khundís* equal 1 *kát* or *maund*.

The *chhápánahá* and the *báragandi pailás* are used in the ordinary dealings with zamindárs and grain-lenders, in measuring out the harvest and so on. They are also used by shopkeepers for measuring out rice, pulse, &c. In ordinary open market transactions, what they call *bikri pailás* are used. These are of various sizes; some are called anna *pailás*, others *dhebuá* or half anna, *paisá* or pice *pailás*, according as the contents sell for 1 anna, $\frac{1}{2}$ anna or 1 pice. Thus for Re. 1 we can always get 32 *dhebuá pailás* of rice, the capacity of the *pailá* varying according to the cheapness or otherwise of the article. The purchaser has not to enquire how many pailás of the article he wants he will get for his money, but he goes about looking to the size of the measures which different dealers are using.

Besides the above, there is another kind of *pailá* called the *rozni* or "daily" *pailá*. It is used only in the household for measuring out grain for the family consumption, for giving servants their daily grain wages, and perquisites, &c. It is never used in public transactions.

Land measures, in the ordinary sense of the word, can hardly be said to exist in Chutiá Nágpur Proper, as the terms used to indicate amounts of land do not correspond to any uniform superficial area. Land is never measured by the rod or the chain, and its area is roughly arrived at by considering how much paddy-seed it will require for sowing. Such a principle of measurement, if strictly adhered to, would lead to a certain uniformity of area indicated by any particular measure: the case is, however, just otherwise. Thus a *páwá* of rice-land in one village may be many times larger than the *páwá* in a neighbouring village. In the same village, the *páwá* is supposed to contain equal areas of land. As a matter of fact, however, it is found to vary considerably from the following causes:—*First*, the general, though not universal, custom is for the rate per *páwá* to be the same for all quantities of land, and the poorer *páwás* are therefore, by way of compensation, larger than the richer ones. *Secondly*, *páwás* which abut on *tánr* or uplands, though originally of the same size, now differ in consequence of the holder of one *páwá* having enlarged his rice land by terracing and taking in portions of the adjoining up-land; while another cultivator has been content to keep his *páwá* as he got it. *Thirdly*, when new cultivators come into the village, the customary rate remains the same, but the rent is increased by reducing the size of the *páwá*. Thus a zamindár having to dispose of a holding of 4 *páwás* at the customary rate of (say) Rs. 3 per *páwá*, would convert the 4 *páwás* into 6, which he would then settle with a new-comer at Rs. 3, and thereby increase the rental of the holding by Rs. 6. The above is a favourite mode of enhancing rents, and one readily understood and acquiesced in by ráyats (Appendix V, page 143). Thus the *páwá* of *bhuinhárs* and old *chatisá* ráyats is almost invariably found to be larger in size than the *páwá* of new settlers in the same village. As an illustration of the

extremely variable nature of the local land measures, I may mention that Captain Grey ascertained by actual measurement the sizes of the *kát* and the *khári* (*i.e.* 4 *páwás*) in 74 villages of the Barkágar estate, and found that the *kát* corresponded to areas varying from ·39 acre to 4·23 acres, and the *khári* from 2·78 acres to 37·34 acres! As with *kát* and the *khári*, so with the other measures; although the *khári* and its well-known subdivision, the *páwá*, vary within wider limits than possibly any other measure.

Excepting parganás Ráhe, Bundu and Támár, there are always two different tables of land measures in use everywhere in Chutiá Nágpur, viz. one for uplands or *tánr*, the other for lowlands or *don*. The following statement shows the land measures in use in different parts of the subdivision:—

Tables of Land measures.

No.	Lowland (don).	Upland (tánr).	Where used.	Remarks.
1	2 Kánis=1 kánwá. 2 Kánwás=1 páwá. 4 Páwás=1 khári.	20 Páilás=1 khundi ... 2 Khundis=1 kát.	Khukrá, Lodhmá, Korámbe, Kurru, Dowalkhand, Umedendá, Jáshpur.	The *páwá* and the *khári* are indeterminate.
2	2 Kánis=1 kánwá. 4 Kánwás=1 páwá. 4 Páwás=1 khári.	The same as above ...	Belkádi ...	Ditto.
3	2 Kánásis= 1kání. 4 Kánis=1 ánná. 4 Annás=1 páwá. 4 Páwás=1 khári.	The same as above ...	Doisá, Aringi, Nowágur, Biru, Uperpát and Láchá.	Ditto.
4	2 Kánásis=1 kánwá. 2 Kánwás=1 ádh ánná 4 Kánwás=1 ánná.	The same as above ...	Bassiá, Biru, Sonpur, Pálkot, Doisá.	An average *ánná* takes about 3 *káts* of seed.
5	20 Pailás=1 khundi. 2 Khundis=1 kát. 10 Káts=1 bund.	20 Pailás=1 khundi ... 2 Khundis=1 kát. 10 Káts=1 bund.	Ráhe, Bundu, Támár	The measures for both lowland and upland the same in these parganás.
6	4 Chágáins or paisás =1 ánná.	The same as above ...	Sillí	An average *ánná* of Sillí takes about 6 *kats* of seed.
7	4 ánnás=1 siki. 4 sikis=1 táká.	The same as above ...	Bántá-Házám, Báránda	An average *táká* takes about 1½ times as much as seed as a Silli *ánná*.
8	16 ánnás=1 páti.	20 cottáhs=1 bighá =2½ standard bighás.	Torí	A *pátti* is equal to 3 standard bighás; its area varies, however, from 2 to 4 bighás.
9	...	For sugarcane land—Five *pohris* or cane-joints=1 gai; 20 gais=1 pan; 20 pans=1 káhan	Five Parganás ...	For sugarcane land these special measurements are used; one káhan of land is roughly equal to ½ to ⅔ of a bighá.

I have said above that the area of the *kát* varies considerably from village to village. The area of the *kát*, where it retains its true value, is roughly equal to two-thirds of an acre or 2 standard bighás. Two bighás of land would require for sowing one *kát* or *maund by measure* of paddy-seed, which would weigh about 28 *pákká* bazar seers. Where the *kát* has exceeded its true size, it will take, in spite of its being called a *kát*, a correspondingly larger quantity of seed to be sown over.

Time.—The current measures of time are as follow:—2 *dand*=1 *ghari*, or ¾th of an hour; 4 *gharis*=1 *pahar* or 3 hours; 8 *pahars*=1 *din* or day and night of 24 hours; 30 *dins* or days=1 *máhiná* or month; 12 *mahinás*=1 *baras* or year. The year thus consists of 355 days or 12 lunar months, and in order to make up for the remaining ten days, a supplementary month is added every third year, which thus contains 13 months. Each month commences on the day following the full-moon, and ends on the day of the next full-moon.

Distance.—The measures are as follow:—About 440 *degs* or paces=1 *guli* or gunshot distance; 4 *gulis*=1 *kos*, or about 5,280 yards=1 English league. The people of the country have, however, a very rough idea of distance, which

is usually spoken of in *poás* and *kos*, which latter is distinguished as *dálbhángá kos*, and arrived at in the following way:—A man takes a green *sál* bough in hand and walks with his usual speed; when all the leaves have withered up, the distance travelled over is put down as a *kos*.

APPENDIX IX.

STATISTICS OF WAGES.

The wages and perquisites of the common village servants have been given in section 9 of chapter II on village officials. Below are given the daily and yearly wages of common agricultural labour, and the daily wages of the blacksmith and the carpenter—the only skilled labourers with whom the ráyats have to deal.

Daily wages of agricultural labour—

If paid in cash—

A man gets 6 to 8 pice per diem.
A woman „ 3 „ 4 „ „ „
A boy „ 3 „ 5 „ „ „

Cash payments for day-labour are usual only in the central parganás of Khukrá, Doisá, Lodhmá, &c. In the southern parganás, and in the Five Parganás and in Torí, day-labourers are usually paid in kind. In the Five parganás a man gets 4 to 6 *rozni pailás* of paddy per diem, equivalent to 2½ to 4 seers of paddy, valued in a year of average prices at 1 to 1½ annas. In the southern parganás a man gets 3 *báragandi* seers and a handful (*anjná*) of paddy, equivalent to about 3 seers of paddy valued at 5 pice. Women and children get proportionately less.

Daily wages are paid only at times when there is pressure of field work, as at planting, weeding and harvesting times. Those who can afford to entertain labourers enter into annual contracts with them in the month of Mágh. The usual rates are as under:—A *dhángar* or field servant gets per annum 18 *káts* or maunds of paddy, and Rs. 6 to Rs. 12 per annum according to his strength, the locality, and the hardness of the work he is usually put to. Thus, for irrigation, Rs. 2 or Rs. 3 has to be paid in excess of the usual rate of wages of the locality. Besides, the servant gets 1 *páwá* of rice at midday for tiffin. Taking his cash pay at Rs. 10, the money value of his wages in a year of average prices will come up to about Rs. 32 a year.

In the Five parganás, a yearly field servant (locally called *manisk*) gets three maunds of paddy; he is fed and clothed like a member of the family, and at the winter paddy harvest he gets $\frac{1}{21}$th of the produce in stalk of the entire paddy area cultivated by him.

Skilled labourer.—A blacksmith is never engaged by the day. He receives certain perquisites from the ráyats of his village for making and repairing their ploughshares; for repairing sickles, hoes, &c., he charges 1 seer of paddy per piece. A blacksmith can earn about 8 to 10 pice per diem.

A carpenter can be had for 4 to 6 annas according to the fineness of the work he can turn out.

Wages have a tendency to rise all over the district. Twenty years ago, a *dhángar* used to get, besides the 18 maunds of paddy which has always remained fixed, only Rs. 3 or 4 in cash per annum. The cash portion of his wages has since then risen to Rs. 10, and in some cases to Rs. 12. The following table exhibits the rise of wages of several classes of labourers:—

Year.		Day-labourers.	Smiths.*	Carpenters.
		Annas.	Annas.	Annas.
1856	...	1—1¼.	2—3	2—3
1870	...	1¼—1½.	3—4	3—5
1888	...	1½—2.	4—6	4—6

* These are the wages of the better class of smiths, not the common village smiths whose only vocation is the making and repairing agricultural tools.

APPENDIX X.

PRICES.

The following table gives the prices of common rice and wheat at Ránchi in each of the 16 years from 1872-73 to 1887-88:—

Table of prices of common rice and wheat in seers per rupee for the 16 years from 1872 to 1887.

Year.	Common rice.	Wheat.	Remarks.
1872-73	22·1	12·6	
1873-74	16·75	12·2	The year of the famine of 1874. At Lohárdagá, common rice sold at 21·25.
1874-75	...	...	
1875-76	...	...	
1876-77	21·52	21·2	
1877-78	24·64	16·76	
1878-79	24·0	19·0	
1879-80	...	...	
1880-81	27·10	14·12	
1881-82	24·9	17·0	
1882-83	24·45	16·33	
1883-84	20·58	15·5	
1884-85	18·45	13·87	
1885-86	19·91	14·62	
1886-87	24·0	21·37	
1887-88	20·79	18·94	

The table exhibits the prices at the Ránchí market. At Lohárdagá, 47 miles from Ránchí, rice sells about four seers cheaper; at Bárwe, 80 miles west of Ránchí, about six seers cheaper; in Biru, in the extreme south-west of the district, the price of rice ranges from eight seers and upwards below that at Ránchí.

The range of prices of barley, Indian-corn, *máruá*, gram and salt for the six years from 1882-83 to 1887-88 at Ránchí is exhibited below—

Table of prices at Ránchí in seers per rupee of five important food articles for six years from 1882-1887.

Year.	Barley.	Indian-corn.	Máruá.	Gram.	Salt.	Remarks.
1882-83	22·52	23·38	34·91	16·37	9·78	
1883-84	19·29	24·17	29·91	14·41	9·58	
1884-85	17·50	19·60	32·50	14·41	10·02	
1885-86	17·35	23·41	34·75	13·56	9·91	
1886-87	19·87	28·81	37·25	18·16	9·54	
1887-88	24·95	30·73	37·40	20·14	9·99	

The following table is reproduced from the Statistical Account of Bengal, volume XVI, p. 358. It shows how much general prices have advanced since the year 1859, the earliest year for which any authentic record of prices is available. The year 1866—the memorable year of the Orissa famine—must be taken as an exception, but the record of prices for that year indicates to what an extent prices may at once swell up in the event of a famine in other districts:—

Article.	1859.	1866.	1870.	Average of five years 1882-87.	Remarks.
Common rice ...	40·0	11·4	32·0	20·75	The rise is least marked in wheat and barley, both of which articles are for the most part imported and not grown in the sub-division.
Wheat	22·7	8·0	16·0	16·86	
Indian-corn ...	51·2	16·0	44·1	25·36	
Barley	22·7	8·0	2·56	19·8	

The following statement shows the monthly average prices current for the five years from 1868 to 1872:—

STATION.	Kind of grain.	January.	February.	March.	April.	May.	June.	July.	August.	September.	October.	November.	December.
Ránchi ...	Common rice ...	24·6	24·4	24·5	23·4	23·4	22·7	22·6	23·6	25·6	27·1	26	25·5
	Indian-corn ...	30·3	33·9	31·8	31·1	32·4	30·2	27·5	27·4	31·6	38·5	41·4	30·8
	Pulses	20	14	14·6	15·1	15·3	15·4	15·1	17·8	15·4	15	15·1	15·2
	Wheat	12·2	12·0	15·3	16·7	14·4	15·1	21·29	15·8	16·3	15·4	13·3	12·0
	Marua	40	50	60	...	...	...	...	...	...	...	...	...
Lohárdagá	Common rice ...	30·6	29·4	28·5	28·3	26·7	27·7	25·7	28·9	31·7	31·9	30·7	28
	Indian-corn ...	20·7	33·9	23·4	30·1	31·1	34	30·1	33·2	36·4	66·3	31·7	29
	Pulses	12·9	12·6	13·9	15	13·4	14·2	14·8	13·3	13·5	14·7	14·9	12·1
	Wheat	14·3	17·3	17·9	17·6	16·8	17	14·9	19·4	18·9	19·2	19	13·7
	Millet	50	...	50	...	...	...	...	50	52	40	40	..

(Borrowed from Mr. A. P. MacDonnell's Treatise on the Food-supply of Bengal and Behar.)

INDEX TO PART I.

(SUDDER SUBDIVISION.)

PAGE.

A.

Aboriginal tribes 7, 8
Abwábs: illegal cesses . . . 143, 144
statistics of . . . 144, 145
Advances of money and grain . . 20
Ahir, or village cowherd . . . 30
Akdin, a pitch-fork 50
Ameniáks, a class of jágírdárs . 104
Area: of the subdivision . . 1
of cultivation . . . 141
Arts . . . . . 122—124
Arums, cultivation of . . . 78
Asan: a silk-worm rearing tree . 124
a timber tree . . . 127
Ashes as manure 40
Aspects, physical 1

B.

Bánghy, a carrying rod . . . 23, 50
Barai, a pulse, cultivation of . . 68
Baraiks, a class of jágírdárs . . 103, 104
Bárándá, an estate. 100
Bárwe, an estate 100
Básilá, an axe 50
Begári, or forced labour . 108, 110, 113, 145
Betel-leaves, cultivation of . . 83
Bet-khetá, a tenure 108
Bhagut bándá, a form of land mortgage 20
Bhándári, or landlord's agent . 29
Bhituriáná, a form of jágír . . 105
Bhuinhári, a tenure . . . 109, 110
Bhuinhari Act, provisions of . . 98
Bhuiyá tenure, a form of jágír . 105
Bhutkhetá, a rent-free service tenure 109, 110
Bodi, a pulse, cultivation of . . 68, 69
Bráhmani river system . . . 5
Brinjals, cultivation of . . . 75, 76
Britbhándár, a form of jágír . . 105
Brittiás, a class of jágírdárs . . 104
Buffaloes, treatment of . . . 87, 89
Bundhs, or embankments . . 43, 44
Bundu, an estate 100

C.

Castes: agricultural . . . 6—9
character of . . . 9—11
Cattle . . . . . 86—92
Chápparbandi, or rent for house-site 110
Chárá, a form of loan . . . 20
Character of castes as agriculturists . . . . . 9—11
Chatisá, a tenure 107, 108
Chibábrit, a form of jágír . 106

PAGE.

C.

Chillies, cultivation of . . . 77, 78
Chop, a fibre 12, 136
Christians, number of . . . 8
Chutiá Nágpur estate, history of . 98—100
Chutiá Nágpur plateau, physical aspects of 2
Climate . . . . . 32—35
Clothing 17, 18
Cocoon-rearing, an industry . . 123, 124
Coffee, cultivation of . . . 123
Commerce . . . . . 117—122
Communications . . . . 114—117
Conveyances 22, 23
Cotton, cultivation of . . . 71—73
Cowdung, as manure . . . 39
Crops grown: names of . . . 50, 51
grouped into harvests . . . 51, 52
rotation of . . 53, 54
importance of . . 52

D.

Dáhá cultivation 72, 73
Dairy produce 89, 90
Dámodar, a river 5
Day-labourers 31, 32
Debottar, an endowment . . 105, 106
Dhángar, a labourer . . . 31
Dhelphurá, a mallet . . . 50
Diseases of cattle . . . . 90—92
Don, or lowland 36
Dondhán, or lowland paddy, cultivation of 54, 62
Dwellings 11, 12
Dyes, from wild trees and plants . 135, 136

E.

Education of the agricultural population 147, 148
Embankments for irrigation . . 43, 44
Emigration . . . . . 23—27
Epidemics among cattle . . . 90—92
Exports . . . . . 118—121

F.

Fairs 121
Famine, liability to, and warnings of 124—127
Fibres from wild plants . . . 136
Fiscal divisions 137
Fish, trade in 121, 122
Five Párgánás, physical aspects of 2, 3
Fodder, supply of 84, 85
Food . . . . . 12—14
supply of . . . . . 14—17
Fuel, upply of . . 85 86

PAGE.

G.

Gaitá, a pick-axe . . 50
Garlics, cultivation of 76, 77
Geology of the subdivision . . 3, 4
Ghátwáls, protectors of hill passes, jágírdárs 105
Goats, treatment of . . . 92
Gondli, a millet 65
Gorá or upland paddy . . . 62, 63
Gorát, a village servant . . 29
Gourds, cultivation of . . . 78, 79
Green manure 41
Gur-making 80, 81

H.

Hánsuá, or sickle 50
Hár or plough 48, 49
Harrow and leveller . . . 49, 50
Hill-streams, as sources of water . 44
Hill systems 4
Hindu castes 7
Hujurhá, a jágír tenure . . . 105

I

Illegal cesses 102, 143, 144
statistics of . . . 144, 145
Immigration 29
Implements, agricultural . . 48—50
Imports 121
statistics of 118, 119
Indebtedness: of ráyats . . 19—22
of zamindárs . . 23
Industries . . . . . 122—124
Insect-pests: of low-land rice . 61
of upland rice . . 63
of *maruá* . . . 64
of *rahar* . . . 70
of tobacco . . . 82
of sugarcane . . 81
of betel leaves . . 83
Irrigation . . . . . 42—48

J.

Jágírs, maintenance and service . 100—106
Jawár, a millet 67
Jíban, a tenure 114
Jungle products, edible . . 18, 128—130

K.

Kámiáddári, a system of joint cultivation 31
Kánchí, a river 5
Karjá, a loan 20
Karkarí, a river 5
Káro, a river 5
Khará, an earth-removing appliance 50
Kháriás, an aboriginal tribe . . 8
Khorposhdári or maintenance tenure 103
Khunt, a family stock . . . 20, 21, 95
Khunt-kátti, a tenure . . . 111, 112
Khurpá, a hand-hoe . . . 49

PAGE.

K

Kool, a river, south . . . 5
north . . . 5, 6
Koeries, a class of Hindu cultivators 9, 11
Kokro, a river 5
Karanj flowers, a manure . . 41
Kori, a spade 49
Korkar, a tenure 109, 113
Kotwár, a village servant . . 29
Kudrum, a fibre plant, cultivation of 73
Kurthi, a pulse, cultivation of . 68
Kusáha, a jágír 106
Kusum: a lac-producing tree . . 122
a timber tree . . . 127

L.

Lac, manufacture of . . . 122, 123
Lakhiráj, a rent-free jágír . . 105
Land tenures: of Chutiá Nágpur Proper . . 98—111
of Five Parganás . 111—113
of Tori . . . 113, 114
history of . 95, 98
statistics of . 146, 147
Leveller, an implement . 49—50
Lever for raising water . 45, 46
Live stock . . . 86—95
Loans, forms of . . . 19, 20
Lohár, or village blacksmith . . 30

M.

Máháto, a village official . . 28
Máhátoi, a rent free service tenure . 109
Mahomedans 7
Máhuá: a valuable tree . . . 127
corollas of the tree, a valuable food . . 13
Maintenance: jágír . . . 103, 112, 113
of a family, cost of . 14
Maize, cultivation of . . 65—67
Manish, a hired labourer . . 31
Mánjhihas, landlord's own cultivation 106, 107
Mánki, an aboriginal tenure-holder 98, 111, 112
Mánkipítta, a tract in párgáná Sonpur 98
Manufactures, Arts and Industries 122—124
Manures . . . . . 39—42
Markets 121
Máruá, a millet, cultivation of . 63—65
Máswár, a cultivating tenure . . 108, 113
Measures . . . . . 148—151
Medicinal trees and plants . . 130—135
Meteorological stations . . . 35
Morábá or aloe fibre . . . 136
Mud as manure . . . 40, 41
Mundá a village headman . . 28
a tenure-holder . . . 111
Mundái, a rent-free service tenure . 109
Mundás or *Mundáris*, an aboriginal tribe 8
Murile chatisa, a cultivating tenure 108
Mustard, cultivation of . . 70, 71

PAGE.

O.

Onions, cultivation of 76
Ornaments 18, 19

P.

Páhán, a village priest 28, 29
Páhánai, a rent-free service tenure . 109
Pailá, a measure 149
Pánbhará, a village official . . 29
Párhás, old village communes . 95, 96
Pasridári, a system of joint cultivation 31
Pátta, a combined harrow and leveller 49, 50
Pease, cultivation of 77
Pigs, treatment of 93
Plough 48, 49
Population, religious divisions of . 6
Potatoes, cultivation of 74, 75
Pressure, barometric, statistics of . 138
Prices, statistics of 152, 153

R.

Radishes, cultivation of 77
Rahar, a pulse, cultivation of . . 69, 70
Ráho, an estate 100
Rainfall : . . . . . 33—35
statistics of 137
Rájhas, tenures 107
Rákuá, a chisel 50
Rakumats : or miscellaneous cesses
of jágírdárs . . . 102
of ráyats 143, 144
Rates of rent 142, 143
Ráyatti tenure in Five Párgánás . 113
Rent-law, operation of 146
Rent suits, statistics of 146
Rice, cultivation of . . . . . 54—63
Rights, common 110, 111
Rina, a form of loan 19
River system 5, 6
Rotation of crops 53, 54

S.

Sábar, a crowbar 50
Sábái, a fibre grass 136
Sagar, a conveyance 22, 23
Sájhádári, a system of joint cultivation 31
Sakarkándá, a yam, cultivation of 78
Sál, a valuable timber tree . . 127, 128
Sarguzá, an oilseed, cultivation of . 70
Seri, a form of loan 20
Service tenures . . 103—106, 112, 113
free 109
Sheep, treatment of 92
Silli, an estate 100
Sim, a species of bean, cultivation of 79
Siuni, a water-raising basket . . 46
Soils, classes of . . . . . 36—38

PAGE.

S.

Statistics, of population . . 6, 138—140
of Christians . . . 8
of emigration . . . 35
of cultivation . . . 52, 141
of manufactures . . 123
of rainfall . . . 137
of temperature . . 137
of barometric pressure . 137
of wind directions . . 138
of rates of rent . . 142
of *ábwábs* . . . 144, 145
of rent suits . . . 146
of tenures . . . 147
of education . . . 147, 148
of wages . . . 151
of prices . . . 151, 152
of exports and imports . 119
Subarnarekhá, a river 5
Sugarcane, cultivation of . . 79—81
Sunkh, a river 5
Sunn hemp, cultivation of . . 73

T.

Támár, an estate 100
Tángor, a jágír 106
Tánr, or upland 36, 37
Tans from wild trees and plants . 136
Tasar cocoons, rearing of . . 123, 124
Tea, cultivation of 123
Temperature 22, 32
statistics of . . 137
Tewán, or summer rice . . . 62
Timber trees 127, 128
Tobacco, cultivation of . . . 81, 82
Topography of the subdivision . 1
Tori, an estate 100
Trade and commerce . . . 117—122
statistics of . . . 118, 119
Trees, yielding timber . . . 127, 128
yielding food . . . 128—130
yielding drugs . . . 130—135
yielding dyes . . . 135, 136
yielding tans . . . 136
yielding fibres . . . 136

U.

Urâons, an aboriginal tribe . . 8
Urid, a pulse 67
Utakar, a tenure 108

V.

Village officials . . . . . 27—30
disputes 30, 31

W.

Wages, statistics of 151
Weights, current 148
Wells, for irrigation 42
Wind directions 138

Z.

Zaripeshgi, a form of land mortgage 19, 20

PART II.

THE PALAMAU SUBDIVISION.

REPORT

ON THE

AGRICULTURE OF THE PALÁMAU SUBDIVISION OF THE DISTRICT OF LOHÁRDAGÁ.

BENGAL SECRETARIAT LIBRARY

CHAPTER I.

SECTION 1.—*Geography and physical aspects.*

Topography.—The subdivision of Palámau, including the fiscal divisions of Palámau Proper, Belaunjeh and Japlá, is bounded on the north by the districts of Gayá and Sháhábád; on the north-west and west by the district of Mirzápur and the Tributary State of Sarguzá; on the south by Chutiá Nágpur Proper; and on the east by Chutiá Nágpur Proper and the district of Házáribágh. The Són forms the northern boundary between Palámau and the district of Sháhábád, and the Kánhár separates Palámau on the west from the Tributary State of Sarguzá.

Area.—The subdivision has an area of 4,260 square miles.

General physical aspects.—The subdivision of Palámau may be described as a hilly and broken country covered for the most part with low jungle. The country to the south and west is occupied by numerous spurs from the plateau of Chutiá Nágpur and the high tableland of Sarguzá, while the rest of the subdivision is a tangled mass of isolated peaks and long irregular stretches of broken hills. The general run of these ranges is from east to west, but the relations of the minor ridges are so involved that it is difficult to assign them any definite axes of elevation. Tuppeh Chechári in the extreme south of the subdivision is most picturesquely situated within a surrounding of high hills. "The valley of Chechári is a complete basin with only one outlet to the north, through which a small stream takes off the drainage of the highlands into the river Koel. On the south it is overlooked by the range of hills in parganá Bárwe; on the west the Jamirá pát, a high plateau in the Tributary Mehal of Sarguzá, rises like a wall to a height of nearly 4,000 feet, confronted on the eastern side of the valley by the Nethurhát pát of 3,600 feet, while a lofty spur from the Jamirá pát, crowned by the natural fortress of Támolegarh, overhangs the valley to the north." The peculiar physical aspects of the páts, and in particular of the Nethurhát pát, have been already described under Chutiá Nágpur Proper. The Nethurhát pát is situated on the confines of Palámau in tuppeh Seemáh to the east of Chechári. The entire south and west of the subdivision present a network of wild hills, which give a severe appearance to the aspect of the country. These parts are, as a rule, very thinly inhabited, and support in many places forest timber of good size. The eastern portion of the subdivision is likewise occupied by numerous spurs thrown off the Házáribágh plateau. The central tuppehs, although hilly in character, present a much less severe aspect, and show a fair proportion of cultivation. The valley of the Ámánat and the lower reaches of the Koel are covered with rice, and contain at the present day little or none of what may be called good forest. The valley of the Ámánat is a long narrow stretch of alluvial land, fertile and clean in appearance, and contrasts beautifully with the rocky and jungly country through which the river shapes its course. The north-east of the subdivision is occupied by tuppeh Deogán. The southern portion of this large fiscal division is

extremely hilly in character, and is several hundred feet higher in elevation than the country to the north and south. In fact, here a long range of low hills takes its rise, and then runs parallel to the Kymore range in Sháhábád as far west as parganá Belaunjeh, dividing a narrow strip of alluvial country, to the north from the rocky country to the south of the range. The northern portion of Deogán, forming the north-east angle of the Palámau subdivision, and a narrow strip of country on the right bank of the Són in parganás Japlá and Belaunjeh are of alluvial origin, and exhibit a highly cultivated appearance. Indeed, the physical aspects, the method of cultivation, and the character of the people of this part of the subdivision differ in no way from those of the adjoining districts of Gayá and Sháhábád. The average elevation of the subdivision has been put down at 1,200 feet above the sea level; but some of the higher peaks and plateaus in the south of the subdivision attain an elevation of considerably over 3,000 feet. The aspect of the hills with which the whole face of the country is thickly dotted over varies according to the nature of the rocks of which they are built up. Thus in the south and east the hills are of gneissic origin, and show an irregular outline broken by sharp ridges and conical peaks; while in the west, many of the hills are capped with sandstone and laterite, and show long flattened summits.

Except in the valleys of the Ámánat and the Koel, Palámau nowhere presents a clean expanse of cultivated country of any extent. Standing on the summit of a ridge or hillock, the entire face of the country appears to be covered over with a waving sheet of low forest, with all signs of human habitation concealed from view, except perhaps an occasional glimpse here and there of a low red-tiled roof. The villages, which are usually of small size, lie ensconced in the hollows among hills, and a stranger passing within even a quarter of a mile of a village, enveloped as it is by jungle on all sides, will fail to discover its existence.

As in Chutiá Nágpur Proper, the face of the subdivision of Palámau is cut up in all directions by numberless streams and rivulets, all of which get dried up in the dry season, and remain more or less flooded during the rains, making communication extremely difficult at these times.

Section 2.—*Geology.*

As in Chutiá Nágpur Proper, the rocks composing the hills are of igneous formation, and chiefly consist of gneiss largely intermingled with granite of several kinds. Sedimentary rocks including sandstones, shales and limestones overlie the gneissic rocks in the west, and are also developed in isolated patches in most of the wide river valleys. The gneiss is broken in at many places by extensive trap-dykes, and by veins of quartz, hornblende and feldspar. In its character and appearance the gneiss of Palámau does not differ from that of Chutiá Nágpur Proper.

Associated with the sandstones and shales are beds of coal varying in quality from scarcely combustible shale to coal of average goodness. Near Latehár and Zalim in the south-east section of the subdivision, and in the valley of the Aurungá, a few thin seams of coal occur. Shales underlying the coal are also developed near Sátbárwá, and may be seen cropping up to the surface on the Ránchí-Daltonganj road. There are also one or two other places towards the upper waters of the Koel where coal occurs; but the best known spot is near the confluence of the Ámánat and the Koel. This field is usually spoken of as the Daltonganj coal-field. The following extract from the Memoirs of the Geological Survey, quoted in pages 413-415 of the Statistical Account of Bengal, volume XVI, sets forth the geology of this important coal-field, and the character and quality of its coal:—

Coal.—The only important coal-bearing area in Lohárdagá District is situated to the north of Daltonganj, the administrative head-quarters of Palámau Subdivision. The following account of this field is taken from the *Memoirs of the Geological Survey*:—

"The Daltonganj Field lies partly in the valley of the Koel river and partly in that if the Ámánat, extending altogether a distance of 50 miles from east to west. Its total area is nearly 200 square miles. This statement of its size, however, conveys a very erroneous dea of its value as a coal-bearing tract, for out of the 200 miles, scarcely 30 belong to the Dámodar series. The boundaries of the field are very irregular, and for distances of considerable length, they are often so obscured by alluvium that they have been plotted only

approximately. The most eastern extremity is near the village of Loharsí (which is just within the Palámau boundary after leaving Házáribagh District). The most western extremity is *probably* near Chitarpur, a mile or so beyond the town of Garwá. Hitherto, it has been the custom to call this field the Palámau, and not the Daltonganj coal-field. There are, however, many coal-bearing areas within the Subdivision of Palámau, and the name consequently of the Palámau field as applied to any one of them is not sufficiently distinctive. The designation would be admissible did any coal-measures occur near the town of Palámau; but that town happens to be far distant from any locality in which coal-measures exist. To indicate, therefore, more precisely the geographical position of the field, a fresh name has been adopted from the Civil Station of Daltonganj, which lies just beyond the southern borders of the field. The surface of the country, within the limits of the field, is an undulating plain with no rising ground (consisting of sedimentary rocks), that has any pretensions to the name of hill. All the inliers of gneiss—and there are several—have been planed down; and although bordering the field there are hills of the same or nearly of the same lithological character, that rise to a height of over 200 and 300 feet, and even considerably more above the level of the Ámánat, still the metamorphic rocks, where within the area of the field, have failed to express a definite physical contour distinct from that of the Tálcher type. The principal drainage channels are the Koel and its affluent the Ámánat. The latter river enters the field at its eastern extremity about two miles west of Loharsí; and then flows steadily westwards until it joins the Koel five miles north of Daltonganj. None of the sections that it exposes in its passage through the Tálchers and Dámodars are important either geologically or economically; and the same remark applies to those of the Koel. The tributaries of the Ámánat are small streams with the exception of the Jinjoi, which may be further noted as the only one of its important feeders that exhibits coal in its banks. The Koel, soon after its entrance into the field, runs between high alluvial banks for about two miles, but when it enters into the area of the Barákars its banks lose their conspicuous height. Its most important tributaries are the Durgáoti, with its sub-tributaries, the Sudabah and the Dánro or Gárwá river. The last-mentioned stream exposes no coal, but it displays the entire series of the Tálchers in the west of the field.

"In ascending order, the formations usually developed in the coal-fields of Bengal are:—I. Tálcher; II. Dámodar—(1) Ráníganj, (2) carbonaceous shales, and (3) Barákar; III. Pánchet—Upper and Lower. In the Daltonganj field, only the Tálcher series and the lowest group of the Dámodars occur. I shall proceed to treat of the economic value of the field.

"On account of the limited area occupied by the Barákars and the paucity of coal seams, the economic value of this field is small. There is, indeed, but one workable seam—that which occurs at Pánduá and Rájherá; and in calculating the available yield of coal, I would leave out of consideration the seams at Singrá and the one in the Sudábah river, as they would only be worked for supplying fuel should their proximity to a lime or brick-kiln give them the advantage of position over the Rájherá seam. For any demands from a distance that may be made upon the Daltonganj field, the Rájherá (or Pánduá) seam only would be available; and as I question whether any local demand will ever arise, a computation of its yield will give the true index of the value of the field. The area covered by this seam may be estimated at three miles by one, and assuming that there is 6 feet of coal, the yield would be 18,000,000 tons. But a considerable correction has to be made on account of waste, &c., in working. From the 18,000 000 tons of possible coal, I do not think a deduction of $\frac{8}{10}$ would be excessive, and we shall have remaining 11,600,000 tons of coal available. Although this amount is small, it is sufficient to supply for the next fifty years any centres of industry that might find it advantageous to draw their fuel from the Daltonganj field.

"In the office of the Geological Survey, the following analysis of the Pánduá coal, which had been exposed for several years, was made by Mr. Tween, viz:—carbon, 64·4; volatile matter, 22·4; ash, 13·4. In the *Indian Gleanings in Science*, vol. iii, page 283, the following analyses are recorded:—(1) Slaty coal, S. G., 1·482; water expelled on sand bath, 9·1; carbon, 52·1; volatile matter, 37·4; ashes, 10·5; percentage of ash in coke, 16·8. (2) Coal without lustre, S. G., 1 419; water expelled in sand bath, 7·1; carbon, 54·1; volatile matter 36·4; ashes, 9·5; percentage of ash in coke, 14·9. Considering that the coal assayed by Mr. Tween had been exposed for several years, and possibly some of the volatile matter had been dissipated, there is a close approximation to the results obtained and recorded in the *Gleanings in Science*. I have little doubt that these assays are of the Singrá coal, and if so, it shows that the coal of the field is of pretty equable quality. Ten to thirteen per cent. of ash is in excess of the better kinds of Dámodar coal, but for ordinary purposes, this amount of inorganic matter is no serious drawback. The coal of this field is capable of performing the duties which Ráníganj coal has hitherto accomplished. The Bengal Coal Company once worked the coal at Rájherá and at Pánduá. Several shafts have been sunk, and two of them are of large dimensions. The finest is one south of the village of Pánduá, which is 13 feet in diameter. The water in it stood at a level of 50 feet below the surface of the ground, on the 18th February 1869. Since 1862, operations have been suspended; but now that the project of the Són Canals has been sanctioned, a demand for coal may arise to bring into activity a branch of industry which so materially affects the welfare of a people. A road has lately been constructed to facilitate the carriage of coal from Rájherá and Pánduá. It runs in a north-westerly direction skiriting the hills which border the Koel. It diverges from the Koel near Muhammadganj, and passing by Haidarnagar and Japlá touches the Són near Budhuá. The following returns of the coal raised between the years 1859 and 1862

are taken from the *Coal Resources and Productions of India*:—In 1859, 28,648 *maunds*, or 1,048 tons; 1860, 30,900 *maunds* or 1,131 tons; 1861, 33,343 *maunds* or 1,220 tons; and in 1862, 43,772 *maunds* or 1,602 tons."

Besides coal, an immense quantity of iron ore is found all over the district, and in particular in the immediate neighbourhood of coal-fields. At present it is worked to a small extent by some of the jungle tribes; the outturn is barely enough to satisfy the agricultural wants of the country. Limestone is also pretty abundant, and occurs in the shape of concretions (*gootin*), or of a calcareous tufa, formed by deposition from water containing lime in solution (*ghuti*). Mountain limestone is also found underlying the sandstone rock to the west. Copper is occasionally found in the subdivision, but no lucrative veins have as yet been discovered.

SECTION 3.—*Hill systems.*

As has been said before, most of the hills in the east, south and west of the Palámau subdivision are mere spurs thrown off the plateaus of Házáribágh, Chutiá Nágpur Proper, and Sarguzá. These spurs bear no definite names, but the peaks are distinguished by names derived either from the names of villages in their neighbourhood, or from some peculiarity in their appearance. The most prominent features of the hill system of Palámau are the Chechári valley in the south of the subdivision, and the Nethurhát plateau, forming the eastern edge of the Chechári valley. The central portion of the subdivision shows short isolated ranges of low hills standing out in the midst of comparatively open country. A long range of hills is, however, found to traverse the northern face of the subdivision, rising in tuppeh Deogán and running due west across the parganá of Japlá, crossing the Koel, and ultimately losing itself in a network of hills in parganá Belaunjeh. This range runs parallel to the Kymore range on the north bank of the Són.

The most conspicuous peaks of Palámau, besides the Jamerá and the Nethurhát *páts*, are:—Bulbul on the south-east boundary, 3,329 feet; Burí on the south-west boundary, 3,078 feet; Kotain in the southern tuppeh of Seemáh, 2,791 feet; Kumándi in the central tuppeh of Bárí, 2,530 feet; and Tungári in the south western tuppeh of Khámi, 2,108 feet.

SECTION 4.—*River systems.*

With the exception of a narrow strip of country in the west of the subdivision, drained by the Kánhár, and a similar strip to the north of the hill range in Deogán and Japlá, which is watered by numerous rivulets flowing directly into the Són, the entire area of Palámau is drained by the North Koel and its feeders. The North Koel rises in the Bárwe hills in Chutiá Nágpur, and passing through the centre of Palámau, falls into the Són about 20 miles above Dehrí. Throughout a large part of its course, the bed of the North Koel is rocky; and even if the worst obstacle—a ridge of gneiss rock crossing the river near the village of Sígsigi—could be removed, the sudden freshets which take place during the rains would render navigation extremely dangerous.

The chief feeder of the North Koel is the Ámánat, which takes its rise in the hilly *parganá* of Kundá in Házáribágh district. It meets the North Koel from the east; and the richest and most thickly populated portion of Palámau is the undulating plain to the north formed by the junction of these two rivers—the Ámánat from the east and the Koel from the south. The bed of the North Koel is rocky up to the point of junction, but that of the united stream is entirely composed of sand. Near the centre of the subdivision, the two rivers coalesce into one, which extends to the Són. The average width of the valleys is about 8 miles, and they are flanked on either side by ranges of hills lying about 15 miles apart.

The Aurangá, another feeder of the North Koel, rises in Chutiá Nágpur Proper, and after a course of about 50 miles, joins the North Koel 14 miles south of Daltonganj. The Aurangá is a rocky and picturesque stream, and its valley forms an area of richly productive soil in the south-east portion of Palámau. Cultivation is, however, sparse owing to the thinness of the population.

CHAPTER II.

SECTION 1.—*Castes engaged in agricultural pursuits.*

As in Chutiá Nágpur Proper, the people of Palámau may be broadly distinguished into three divisions, namely, (1) the Hindus, (2) the Aboriginal tribes, and (3) the Mahomedans, Christians and others. Unlike its sister subdivision, the Hindu element in Palámau largely preponderates over the aboriginal tribes, as will appear from the following table reproduced from the Report of the Census of 1881. The majority of the present Hindus of Palámau are derived from the aboriginal tribes by conversion. In Chutiá Nágpur the great bulk of the aborigines held aloof from the Hindu society; in Palámau it was just the reverse. It is for this reason that Palámau has been described as a kind of neutral ground between countries inhabited almost entirely by the aboriginal tribes on the one hand and by the pure Aryans on the other.

With the exception of a few nomadic tribes like the Brijeahs and the Birhors, the population of Palámau is almost exclusively agricultural. The numerical strength of each division of the population may be therefore accepted as an index to the part it takes in the cultivation of land.

Classification of the People according to Religion.

No.	Police Circle.	Hindus.		Mahomedans.		Aboriginal tribes.		Total.
		Number.	Percentage.	Number.	Percentage.	Number.	Percentage.	
1	Daltonganj	66,214	85·3	7,798	10·1	3,287	4·3	77,299
2	Gárwá ...	65,632	83·0	9,564	12·1	3,921	4·9	79,117
3	Ránká	37,173	79·9	2,263	4·8	7,110	15·3	46,546
4	Chittarpur	34,230	93·0	2,181	5·9	427	1·1	36,838
5	Páton	71,073	89·5	6,646	8·3	1,689	2·2	79,408
6	Máhuádánr	7,842	53·7	576	3·9	6,249	42·4	14,667
7	Hosseinábád	90,756	88·5	11,094	10·8	665	0·7	102,515
8	Latehár	36,638	75·7	2,992	6·1	8,802	18·2	48,432
	Total ...	409,558	84·4	43,114	8·9	32,150	6·7	484,822

It appears from the above table that the Hindus form 84·4 per cent., the Mahomedans 8·9 per cent., and the pure aboriginal tribes 6·7 per cent. of the entire population. In only three police circles (Máhuádánr, Latehár, and Ránká) do the latter form over 10 per cent. of the population; and in Máhuádánr, the least populous of the police circles, do they approach to about half of the population.

The Hindus.—Below is given a list of the important Hindu castes, and of the Hinduized and semi-Hinduized aboriginal castes found in the sub-division. Besides those mentioned, there are a good many minor castes, but their number and importance are too small to call for separate mention in a report of this kind:—

Hindu Castes.

	Name of caste.	Caste profession.
1.	Bráhmans	Priests.
2.	Rájputs	Soldiers.
3.	Káyasts	Writers.
4.	Koeris	Market-gardeners.
5.	Kurmis	Cultivators.
6.	Kándus	Ditto.
7.	Dhánuks	Ditto.
8.	Málís	Pith-workers.
9.	Gosáins	.....
10.	Rájbháts	Heralds.
11.	Káhárs	Domestic servants and palki-bearers.
12.	Dosáds	Watchmen.
13.	Ahirs	Herdsmen.
14.	Gárerís	Shepherds.

Hindu Castes—concluded.

	Name of caste.	Caste profession
15	Telís	Oilmen.
16.	Burhís	Carpenters.
17.	Lohárs	Blacksmiths.
18.	Kumbhárs	Potters
19.	Házáms	Barbers.
20.	Dhobís	Washermen.
21.	Málláhs	Fishermen.

Hinduized and semi-Hinduized Aboriginal Castes.

1.	Cheros	Landlords and cultivators.
2.	Kherwárs	Ditto.
3.	Nágasiás (Kissáns)	Ditto.
4.	Bhuiyás	Laborers.
5.	Rájwárs	Ditto.
6.	Nuniyás	Navvies.
7.	Beldárs	Ditto.

It will be observed that the exclusively agricultural castes are very few The cultivators of Palámau are recruited from all the professional castes mentioned above; and what I have said in my report on Chutiá Nágpur Proper holds equally true in Palámau—that although most of the castes have distinctive professions of their own, very few people will be found who do not depend on the pursuit of agriculture to obtain a portion of their livelihood.

Among the converted aboriginal castes, the Cheros and the Kherwárs have been long since assimilated into Hindu society, and now rank in Palámau as superior castes of Hindus. They call themselves Rájputs, although not yet allowed to marry freely with the superior classes of that caste. The ethnological history of the Cheros and the Kherwárs, who were very recently the masters of the large fiscal division of Palámau, is very interesting. It will be found in volume XVI of the Statistical Account of Bengal. The Cheros and the Kherwárs form between them about one-third of the total Hindu population of Palámau. The remaining Hinduized aboriginal castes mentioned in the above list yet retain in their habits and manners evident traces of their aboriginal origin.

The Mahomedans—Form a very small proportion of the population of Palámau. The great majority are Jellahars or weavers by caste; in the police circle of Hosseinábád small colonies of superior castes of Mahomedans are found in several places. The fiscal division of Japlá, comprising this police circle, was till very recently the property of a family of Nawabs; a large number of high caste Mussalmans were therefore induced to settle in the parganá.

The aboriginal tribes.—It will appear from the statement of population given above that the aboriginal tribes form 6·7 per cent. of the total population; their agricultural importance is, however, still less, as many of the tribes, like the Brijeahs, Birhors, Agoreahs, Asurs, Kherwárs, have not yet been weaned from their wild nomadic life. Many of these lead lives in no way removed from those of the most primitive people that we read of—living as they do entirely on wild herbs and roots and the produce of the chase—while others, equally nomadic in habit, grow a few hardy crops, like *rahar*, *til*, *urid* and *bodi*, &c., by a very rude system of agriculture. For this purpose they neither possess plough nor hoe, but merely make a small hole in the ground with a sharp pointed bamboo, into which they drop one or two seeds. They rarely remain in the same hill for two successive seasons. The purely agricultural aboriginal tribes are the Uráons, the Mundás, and the Páháriás The first two are the same tribes as prevail on the plateau of Chutiá Nágpur Proper; in Palámau, however, the Uráons show a remarkable degeneration in point of physique, and perhaps also of integrity of character, from their kindred of Chutiá Nágpur. Their degeneracy is in all likelihood due to their living in Palámau among a population mainly composed of Hindus, and to the absence of those customary rights which as ráyats they claim in Chutiá Nágpur Proper. I refrain from noticing the ethnological history and habits of any of the aboriginal tribes and Hinduized aboriginal castes, as they

are not relevant to the purpose of this report. The history of the tribes will be found in volume XVI of Dr. Hunter's Statistical Account of Bengal.

Neither Palámau nor any portion of it having ever been cadastrally surveyed, I am unable to give figures showing the agricultural importance of each caste in the subdivision.

It is necessary to speak a few words regarding the distribution of the several classes of people over the subdivision. The purely aboriginal tribes muster strong in the south of Palámau which adjoins the aboriginal territory of Chutiá Nágpur Proper and Sarguzá. Further north towards Behar the number gradually gets fewer. Those among the aboriginal tribes who have settled habits of life are found either living in small jungly villages, or when occupying the position of herdsmen and labourers, in separate hamlets or tolás dependent on larger villages inhabited by their Hindu masters.

The Hinduized tribes of Cheros and Kherwárs, who are the most important castes in point of number, are usually found living in jungly villages, and are seldom associated with the purer castes of Hindus. These latter occupy the more favoured parts of the country, such as the valleys of the Ámánat, the Koel and the Aurangá, and the flat fertile strip of alluvial country in the north of parganá Deogán and along the south bank of the river Són in parganás Japlá and Belaunjeh.

Section 2.—*Their character as agriculturists.*

The Koerís and next to them the Rájputs are consided as the best among the cultivators of Palámau: they grow crops like sugarcane and poppy, which call for heavy and strenuous labour for many months of the year. The Hinduized aborginal tribes—the Cheros and the Kherwárs—and the pure aboriginal tribes are found incapable of continued exertions, and do not possess the skill and patience necessary to the cultivation of such valuable and paying crops as sugarcane and poppy, which require, besides continuous irrigation, hoeing and weeding, minute and intelligent attention to each individual plant. These latter people live for the most part in jungly villages, and grow such crops as are easily raised, or at least require manual labour of ordinary kind. Their favourite crops are maize and various millets, cotton, til, urid and rahar. The cultivation of the rabi crops—wheat, barley, linseed, gram, peas, &c.—is mostly confined among the Hindus; the villages inhabited by the aboriginal tribes being usually too hilly to admit of *rabi* cultivation. Thus while the Hindus depend for the most part upon *rabi* crops, and are busily engaged in their cultivation during the winter months, the Cheros and the Kherwárs subsist mainly on the produce of the *bhadoi* harvest, and idle away the greater part of the year in chase and other useless pursuits.

Among the aboriginal tribes the Kols (Uráons) are reputed for their diligence in all manner of earthworks, especially in the preparation of new rice lands by digging and levelling.

Section 3.—*Dwellings.*

As regards the accommodation in dwellings, the materials used in their building, and their cost, Palámau differs in no way from Chutiá Nágpur Proper (*vide* section 3, Chapter II of my Report on Chutiá Nágpur Proper). Further description is therefore unnecessary.

Section 4.—*Food.*

Cereals.—The staple cereals of Palámau are rice, maize, *máruá* (Eleusine corocana), wheat and barley. Gram, and occasionally peas, lentils and *khesári* (Lathyrus sativus) are eaten as *sátu* in the same way as wheat and barley, and thus supply in a certain measure the place of cereal food. Besides *máruá*, there are certain other millets of less importance which are grown and consumed in the subdivision. These are *gondli* or *menjhree* (Panicum miliare), *sáwán* (P frumentaceum), *chine* (P. miliaceum), and *kodo* (Paspalum scrobiculatum). These are all *bhadoi* crops grown on comparatively poor soil with the exception of *chine*, which is raised as a summer crop with irrigation.

The relative importance of the cereals.—There are no statistics showing the area under each of the above crops in Palámau. Accurate figures as to the proportions in which the several cereals enter into the dietary of the people cannot be given. The subdivision of Palámau may be distinguished into two areas, often blended with one another, which differ remarkably from one another in their physical characteristics. These are (1) the alluvial plains formed by the rivers Koel, Ámánat and Són. These are included for the most part in the Police Circles of Daltonganj and Páton, and in parganá Japlá in the Police Circle of Hosseinábád. These river valleys form the richest parts of Palámau, and are mainly occupied by Hindus. They are mainly devoted to the cultivation of rice, and to a less extent of wheat, barley, gram, lentils, and also sugarcane; but very little of the *bhadoi* crops is grown in these parts The people, who are for the most part Hindus, live mainly on rice. It may be said that about $\frac{3}{5}$ths of the total food of these parts is composed of rice, while the *bhadoi* crops—Indian corn and *nnáruá*—and the *rabi* crops—wheat, barley and gram eaten as *sátu*—form the remaining $\frac{2}{5}$ths. In parganá Japlá, the dependence of the people on rice seems to be still greater. (2) The hilly tracts which form the remainder of the subdivision. These are included in the Police Circles of Latehár and Mahuádánr in the south-east and south, Ránká and the western half of Gárwá in the west, parganá Belaunjeh in Hosseinábád in the extreme north west of the subdivision, and the greater portion of the Police Circle of Chittarpur. The hilly tracts are mainly inhabited by semi-Hinduized aboriginal tribes. There is comparatively little rice cultivation in these parts, and much less even of *rabi* cultivation. The *bhadoi* crops—maize and *máruá*, and to a smaller extent *sáwán*, *menjhree* and *kodo*—are, however, extensively cultivated, and on these indeed the majority of the people depend for their sustenance. What little of rice is cultivated is appropriated by the richer classes—and the ráyat taste very little of this luxury. It may be said that $\frac{3}{4}$ths of the food-stuff of these parts are derived from the *bhadoi* harvest, and the remaining $\frac{1}{4}$th from rice and the rabi crops.

It would naturally appear that a bumper *bhadoi* harvest, even followed by the loss of the rice crop, would leave untouched the aboriginal tribes inhabiting the hilly parts of the subdivision, while the loss of the rice harvest would tell severely on the Hindu population; on the other hand, plentiful harvests of rice and rabi crops, if preceded by the loss of the *bhadoi* crops, would bring little relief to the aboriginal classes. This is a very important fact, and should be borne in mind in the event of Palámau being threatened by famine.

Pulses and vegetables.—As to the use of pulses and vegetables I cannot note much difference between the people of Chutiá Nágpur Proper and Palámau. The ordinary pulses taken along with rice or some other grain food are *urid*, *rahar*, and *khesári*; gram, lentils and peas are occasionally taken as *dál* by the better classes of the people of Palámau, but for the most part these are taken in the form of *sátu* as a substitute for cereal food. The aboriginal tribes cannot afford a liberal consumption of pulse, which they very often replace by various *ságs* or green herbs. A few of these are cultivated, but most of them are collected in the jungles. Regarding the use of *ságs*, *vide* p. 13 of Part I of this Report.

Edible jungle products.—The edible jungle products of Palámau are precisely the same as those of Chutiá Nágpur Proper (*vide* pp. 128—130, Part I of this Report). Among these, *máhuá* and wild yams (*kándá*) occupy a prominent place. As an article of food, *máhuá* possesses greater importance in Palámau than in Chutiá Nágpur Proper. When cereals are cheap, *máhuá* is only occasionally resorted to as food; but in a year of high prices, the ráyats would fain live on the *máhuá* for a considerable period.

Animal-food.—The ony animals reared for food are fowls, goats, sheep and pigs. Fowls and pigs are kept only by the aboriginal tribes like the Uráons, and the semi-Hinduized aboriginals like the Bhuiyás. The Cheros and Kherwárs, who pretend to be Rájputs, behave in respect of food like good Hindus. Large flocks of sheep are met with in Palámau in the possession of a pastoral tribe—the Garerís; but these mostly find their way eventually to Behar, whence they disperse in different directions to meet the wants of townspeople. With the exception of the Brámhans, all Hindu castes freely partake of goat's

flesh; this is, however, a costly article and partaken of as an occasional treat. Fish is very scarce in Palámau. The Koel, the Ámánat and the Són, and the numerous mountain brooks abound in small fish during the rains. but there is no proper agency for catching them. During the dry months most of the rivers and brooks get dry, and fish becomes still more scarce in this season.

Cost of living.—The standard of living of ráyats in Palámau does not appreciably differ from that of the ráyats of Chutiá Nágpur Proper. The figures for the latter (page 14 of Part I) may therefore be accepted as true for the former.

Food supply.—With regard to Chutiá Nágpur Proper, I have already (pages 14—17, Part I) expressed my impression that the bulk of the ráyats are not well provided with good food; they had indeed enough to eat, but the stuff on which they were forced to live was not of the proper kind. A people depending to a certain extent on various jungle products, without which their store of grain would not be sufficient to maintain life, could not be said to be well-fed. With regard to Palámau, I can say neither this way nor the other. I had the misfortune of visiting it at a time when the poorer classes of the people were actually struggling under the pressure of a partial scarcity. I had not seen them in their better times, and could not therefore form any conclusion as to their habitual condition. It appears to me that the aboriginal tribes, who mainly inhabit the hills, are habitually poor, live on a diet of coarse grain which many of them are at times called upon to supplement by jungle produce. In this respect they resemble the aboriginal tribes of Chutiá Nágpur. The pure Hindu population inhabiting the fertile river valleys are usually well off, and live on a better quality of food. While travelling about the subdivision during the scarcity which prevailed in the early part of 1889, I observed with great surprize that while tales of suffering were heard from all sides, the Hindu population of the favoured region appeared contented and showed no sign of destitution.

This circumstance leads me to believe that, whatever we may say of the tribes living in the hilly parts of Palámau, the Hindus inhabiting the plains are a fairly prosperous class. The precarious condition of the tribes is, on the other hand, made up partly, if not wholly, by their ability to live on the natural produce of the forest.

Section 5.—*Clothing.*

The Hindus of Palámau, including the Hinduized tribes—the Cheros and the Kherwárs—dress themselves like their neighbours, the people of Behar. The well-to-do classes have largely taken to the use of foreign cloth, but the traditional feminine occupation of spinning is still carried on in most households. In Chutiá Nágpur Proper, it is only the Kol women and the Chiks and Baraiks who make it an occupation of spinning thread. Palámau is, however, a great cotton-growing country, and people still find it to their advantage to use home-spun cloth. There is no doubt, however, that European piece-goods are in increasing favour with the better classes of the society, and are slowly replacing the produce of the hand-loom. Most people still wear the *dohar*, a thick broad sheet of cloth of native manufacture, as a winter covering. The articles of apparel of a Palámau Hindu of average means are a *dhuti* or waist cloth wrapped round the loins and falling over the legs as far as the knees and a *chádor* or *dohar* of cotton which serves as a covering for the upper party the body and a pair of country-made shoes. A *jamá* or shirt coat and a cap or a *pagri* are also put on on special occasions.

The poorer people ordinarily wear a *kaupin* or *bhágoán*, which is a narrow piece of country cloth about 3 feet long and a few inches broad, costing about 4 pice It is passed between the thighs and attached in front and behind to strings worn round the waist. The aboriginal tribes, who are usually poor, are ill-clad as they are ill fed; the Hindus are superior to them in both respects.

The women of the superior castes of Hindus wear *sáris;* but those of the lower castes of Hindus and the aboriginal tribes wear the *kháriá*, which is the same as is used by the Kols of Chutiá Nágpur Proper, being composed of two strips of cloth 12 cubits long sewn by their edges along the middle, and fringed with red, and occasionally black and blue threads. The women spin the

thread and have it woven up into cloths of the required size and thickness by the Jellahars, on paying 2 pice per running yard, or per *pawá* of thread woven up. Hindu women, high and low, also wear a short jacket *kurtá* without sleeves.

I have previously alluded to the increasing popularity of foreign piece-goods; but foreign yarn, European and Bombay, seems to be in still greater demand. Cloths of native manufacture are as often made of home-spun cotton as of imported thread.

SECTION 6.—*Indebtedness.*

Zaripeshgi or usufruct mortgage and *mokarri* are the usual means of raising money on the strength of landed property in Palámau. Regarding the nature of these leases, and the premiums paid in consideration of these, *vide* page of Part I of this Report. *Bhagatbándá* leases, under which a cultivator borrows money on parting with his holding to the *sáhu* for a specified number of years, are not in vogue in Palámau.

The above forms of borrowing are necessarily confined to the landed classes. The usual forms of petty cash and grain loan among the ráyats are the following:—

(1) *Karjá* or petty cash loans.—These may be taken at any time of the year at stipulated rates of interest, which vary from an anna to half anna per rupee per mensem in case of small loans to 12 per cent. per annum in case of larger ones. Usually the ráyats take small loans in the period from Bysák to Srávan, when the price of food is high, promising to pay the principal and interest at harvest either in cash or in grain at the market rate then prevailing.

(2) *Chárá.*—The same as prevails in Chutiá Nágpur Proper (page 20, Part I). The principal is paid in cash, and the interest is paid in the shape of 1 maund (*kachchá*) of grain after the harvest.

(3) *Khepí*—Is a loan taken by *bepáris* or petty dealers to enable themselves to carry on their trade. It is so called from the frequent journeys (*kheps*) the *bepári* makes backwards and forwards, purchasing goods in one place and disposing of them in another For every journey he thus makes, he undertakes to pay interest at a specified rate on the principal borrowed. The rate may be ½ anna to 1 anna per rupee for every journey and varies according to the number of days occupied by the journey.

(4) *Dádní* or advances.—These advances seem to be very popular These are taken in the summer months when the ráyats are usually in difficulty; they bind themselves to deliver for every rupee thus borrowed a stipulated amount of the produce of their own labour, which may be cotton, *ghee*, lac or *tasar* cocoons. The advances are made by tradesmen, who manage in this way to buy at about 25 per cent. cheaper than the market rate. Occasionally the stipulation is to the effect that the borrower will deliver to the *mahájan* so much more for every rupee of principal and interest than the prevailing market rate. The *mahájan* also makes it a condition that so long as his dues are not satisfied, the borrower will not be allowed to sell his produce to any outsider. Besides the cash loans, loans in kind are also prevalent. These latter consist in advances of grain taken by ráyats in Bysák to Srávan either to be used for seed or food. Grain borrowed for seed is known as *beejan* and fetches 50 per cent. of interest (*dehrá*), and that for food is known as *khiyan* which fetches 100 per cent. (*dubar*). Both principal and interest are delivered at harvest time.

Serí is a loan of salt, and occasionally of tobacco, prevalent among the aboriginal tribes of the south and south-western tuppehs. The borrower binds himself to deliver for every seer of salt borrowed three or four seers of cotton, or stipulated quantities of other produce. The principal of the loan is quite out of proportion to the amount ultimately delivered by the ráyat. The *seri* form of loan is gradually dying out.

The indebtedness of Pálamau ráyats is equal to, if not greater than, that of the ráyats of Chutiá Nágpur Proper. The *sáhus* or *bánnyás* are the same exacting unscrupulous class of men here as they are in Chutiá Nágpur. I need not therefore reproduce here what I have already said in Part I regarding their dealings with the ráyats. I beg also to refer to pages 422-23 of volume XVI of the Statistical Account of Bengal, in which Dr. Hunter quotes an extract from

Mr. Forbes' report on Palámau, which describes the *modus operandi* of the *sáhu* and the advantage he gains by the dealing over his ignorant unsuspecting victim.

Although the Hindus inhabiting the fertile river vallys seem to be fairly prosperous, few of them have any surplus left after their necessaries have been met; in years of high prices most of them are obliged to apply to the *mahájans* for advances of seed and grain, and in this way involve themselves in debt, which it often takes them several years to repay. Taking all round, however, the Hindu population is comparatively free from debt.

As regards the Hinduized tribes of Cheros and Kherwárs, who form the great bulk of ráyats, their material condition is much less satisfactory. Many of them used to be jágírdars, but very few now retain possession of their properties. Most of them have gone to the *sáhus*. The cultivators fare even worse. Although they have no landed property to lose, their indebtedness prevents them from reaping the full profit of their labour, the greater portion of the produce being appropriated by the money-lender in payment of his dues. The Cheros and Kherwárs are, however, gradually awakening to a better sense in proportion as they are coming into more extended contact with the outer world, and do not fall such easy dupes to the wily *sáhu* as they used to do in days of old. Since 1874, Palámau has enjoyed a series of good harvests, and many ráyats have freed themselves from the state of bondage in which they used to live formerly. Many Chero and Kherwár ráyats have assured me that although in former years they had been largely robbed by the money-lenders, they have since learnt to help themselves better, and would no longer borrow on the terms dictated by the latter. Formerly, lac and *tasar* used to be bought up by the *sáhus*, who made advances to the cultivators for the purpose, the actual workers getting little more than the wages of their labour. But the people appear now to understand their position, and would no longer accept advances at eggregious rates of interest. Several English *tasar* and lac firms have come on the scene, and by making advances on much more favourable terms than those which used to be offered by the native dealers, have taught the ráyats to be on their guard in their dealings with the latter.

SECTION 7.—*Conveyances.*

The following conveyances are in use in Palámau:—

(1) *Pack-bullocks.*—The bulk of the internal and external trade of Palámau is carried on by means of pack-bullocks. In fact, with the exception of a few carts that come from Behar and Ránchí, pack-bullocks are the only conveyance for goods in the subdivision. The whole of the trade between Palámau and the Tributary States is carried on by them. Pack-bullocks usually belong to the larger breed of cattle imported from Behar and the North-West. Ráyats may be also found using their plough animals as pack-bullocks in idle seasons for carrying produce to the market and import grains, when necessary, on their own account.

At Gárwá, the largest mart in Palámau, as many as 4,000 pack-bullocks may be found on the market-days.

(2) *Bánghies* and *moor-bojhiás.*—The people of Palámau will never consent to carry loads in *bánghies*, thus differing in the practice of carrying loads from the Kols of Chutiá Nágpur Proper. The Kols of Palámau, however, follow their traditional way of carrying burthen on the shoulders. The Palámau people, with the exception of the small class of Kols, carry loads on their heads, and when doing so, are spoken of as *moor-bojhiás* (*lit.* loaded on the head). A *moor-bojhiá* will carry a little more than half of what a Kol *bánghiwalá* usually does.

(3) *Bullock-carts.*—The use of bullock-carts is, as I have already said, very limited in Palámau. There is no doubt, however, that with the increase of good roads, their number is yearly increasing. The principal cart routes are only two, viz.—

(1) The Ránchí-Daltonganj road.
(2) The Daltonganj-Behar road *viá* Hariharganj.

A few carts may be found on the road between Daltongunge and Gárwá, and on the road from Sháhábád to Gárwá *viá* Hosseinábád and Mánjhowan. A portion of the latter road is a mere surface track.

During the rains, cart traffic is altogether suspended owing to rivers and brooks crossing the routes being flooded. The best roads in Palámau are only fair-weather roads. In the rainy season even pack-bullocks make their way with great difficulty. The great market of Gárwá is almost deserted in the rains.

(4) *Meáns.*—This is a simple arrangement made use of by the ráyats to carry wood and bamboos, and occasionally straw. It consists of a triangular wooden frame without any wheels suspended from the yoke to which a pair of bullocks are yoked. When carrying bamboos or wood, the triangular frame is dispensed with, the bundles being merely attached to the yoke. For the *dáhá* system of cotton cultivation, large quantities of wood have to be transported to the field from neighbouring jungles for which the *meáns* is largely used.

SECTION 8.—*Movements of the Agricultural Population.*

EMIGRATION—IMMIGRATION.

Emigration does not possess any importance in Palámau. In this respect it offers a remarkable contrast to its sister subdivision of Chutiá Nágpur Proper. Some five or six years ago, emigration to the tea districts was wholly unknown in Palámau, but since then the number of emigrants seems to be annually increasing. Yet the number who emigrate to the tea districts of Assam is very small indeed compared with the hordes of coolies who turn out every year from Chutiá Nágpur Proper. No Coolies appear to have been registered at Daltonganj during the last ten years.

The truth is that the majority of the coolies of Palámau are recruited among the non-Aryan tribes living in the southern and central tuppehs, and are carried off as free emigrants and even those who are registered are taken to Ránchí for the purpose.

Any detailed description of the manner of recruiting is unnecessary. For this I beg to refer to pages 24—5 of Part I.

The emigrants from Palámau are mostly Cheros, Kherwárs, Kols, Bhuiyás, and Chámárs. The reasons which make them leave their homes to seek for livelihood abroad are those which operate in all recruiting districts (page 26 of Part I). The emigrants are mostly poor ráyats who have got into debt, or are landless bondsmen or *kámiyás* who see no other means of freeing themselves from their masters' chains than by leaving their homes without notice. The Palámau emigrants go to Assam, Sylhet, and Cachar, and seldom or never to Darjeeling, the Dooars or Calcutta. The emigration cannot be said to be spontaneous, as it is artificially stimulated by garden sardárs and *árcáttís*, who throw all possible inducements before the intending emigrants. The desertion of *kámiyás* is a frequent matter of complaint with the landed classes, who are afraid that if the tide of emigration goes on swelling for a few more years, they will get no one to work for them, excepting at high day-wages.

As I have already said, the recruits are men of the southern and central tuppehs. There is yet no emigration from Belaunjeh, Japlá and the tuppehs to the north.

Immigration.—There is little or no immigration at present into Palámau. But ever since the occupation of Palámau by the British and up till very recently, a strong tide of immigration used to flow into Palámau from the neighbouring districts of Gayá and Sháhábád. Most of the good Hindus of the subdivision are descendants of men who came to Palámau some two to six generations ago. All the fertile river valleys have been pretty well occupied; and although there is an almost unlimited amount of land available for cultivation, yet it is of a hilly character, and is not fertile enough to tempt people from outside.

SECTION 9.—*Village Officials.*

The following account of the village officials is virtually the same as that given by Mr. Forbes in his report, and reproduced by Dr. Hunter in his Statistical Account of Lohárdagá (pages 329—332). In most villages we find five regular village servants—the *baigá*, the *kotwál*, the *lohár*, the *burhi*, and the

chapnár. In most villages we now find the *chowkidar*, who is a servant of Government, and in the larger Hindu villages, the *dhobi*, the *házám* and the *purohit*.

(1) *Baigá*.—The following extract from the Statistical Account of Lohárdagá will show the functions of the village *baigá*, the mode of his election and his remumeration :—

The chief duties of the village priest, variously called *baigá*, *pujári*, or *páhn*, consist in keeping away evil spirits from the village, and in performing sacrifices to propitiate them. No village is without a *baigá*; and such is the superstition of the people, that they would rather desert their land than remain on it without a priest. "Generally speaking," says Mr. Forbes, "he is a member of one of the aboriginal tribes, but in some cases I have found Bráhmans and Rájputs holding the office. He is looked up to with awe by every caste in the village, is responsible for the appearance of disease among man and beast, and is bound to offer up the necessary sacrifices to drive it away. He is supposed to be better informed on all that concerns the village than any one else, to have a thorough knowledge of its boundaries and to be able to point out each man's tenure. Among the jungle tribes, he is invariably the arbiter in all disputes as to land or rent, and is the oracle in all discussions affecting the ancient customs and rights of the village, with all of which he is supposed to be intimately acquainted. He is bound at the commencement of each harvest to offer up sacrifices, and to perform certain ceremonies to propitiate the spirits. For this purpose he levies contributions of money, grain, cloth, fowls and goats from all the villages. Until these sacrifices have been performed, no one would think of yoking a plough, and the *báigá* often takes advantage of delay to increase his demands.

"The office is hereditary, but in the event of its becoming necessary to appoint a *baigá*, a meeting of the entire village community is held, and the successor is chosen by vote; the individual selected is then called upon to accept the post, and in the event of his doing so a day is fixed for the ceremony of installation. On the appointed day the whole village community meet in solemn conclave. The landholder or village headman presides; and the proceeding commences by his calling upon the candidate to state publicly whether he is willing to accept the *baigáship*, and on giving a reply in the affirmative, the emoluments he will receive and the duties he will have to perform are explained to him. He is then conducted round the boundaries of the village, the different landmarks of which are pointed out to him. The whole party then return to the place of meeting, when the president taking up the *baigá's* wands of office, which are called *churi kátári*, solemnly hands them to the new incumbent, and the installation is complete. The wands above referred to are the sacrificial instruments, and are heirlooms of the village; they are presented in the formal manner above described to each successive *baigá*, and are used solely in sacrifices."

In every village there are lands specially set apart for the support of the *baigá*, which he holds rent-free. When his jurisdiction extends to two or more villages, he holds land only in the village where he actually resides, while the others pay him tithes in kind. The average extent of *baigá* holdings is about two standard *bighás* of rice-land, with a certain area of upland attached. But Mr. Forbes mentions one such tenure, in which the rice-growing area alone amounted to sixteen standard *bighás*. If there are any *mahuá* or mango-trees in the village, the *baigá* gets a share of from two to five trees. Towards the south, some of the *baigás* on the Government farms claimed to hold from two to three hundred *mahuá* trees; but they were unable to prove possession, and their claims were consequently disallowed.

(2) *Kotwál* or *gorait*.—This functionary exercises the same powers and bears the same responsibilities as his namesake in Chutiá Nágpur Proper. He is practically the zamindar's drudge, by whom he is appointed. His duty is to carry to the police-station information of any crime, or of any occurrence requiring the intervention of the police. A *kotwál's* jurisdiction generally extends over from two to six villages; and where there is no *chowkidar*, he performs the duties of village watchman. In many villages he holds a small tenure rent-free and gets Rs. 3 to Rs. 6 annually, besides a sheaf of unthreshed grain from every cultivator's crop. This perquisite is called *panjá*, and frequently forms the only remuneration of the *kotwál*. In any case, however, he receives at the winter rice harvest a *paseri* or two of grain, as a free gift from the cultivators. This annual present varies in amount according to the richness of the crop, and is called *khalyáni*, from *khaliyán*, a threshing-floor. The office of *kotwál* is generally hereditary; but when it does become vacant, the landholder has the power of appointing a successor. He is bound, however, to send information to the police, giving the name of the new incumbent.

(3) *Lohár* or blacksmith.—The blacksmith is found in many villages. His duty is to make all the iron implements of his clients, and keep them in repair. The ráyats must find their own iron. He is paid at each of the three harvests (*bhadoi*, *kharif rice* and *rabi*) by a maund (*kachchá*) of grain per plough. This payment is called *munni*. When a ráyat reaps only two harvests, the *lohár* of course gets *munni* only twice a year. While engaged in making

or repairing the ráyat's implements, the latter has to find food for him, or in lieu of that, gives him 2 *kachchá* seers of grain.

(4) *Burhi.*—The *burhi* is the village carpenter. His duty is to make and repair the ráyats' ploughs. He is remunerated in the same manner as the *lohár.*

(5) *Chámár.*—The *chámár* is the hide-dealer, whose duty is to provide the ráyat with the leather thongs required for the yoke. He gets as his remuneration a *panjá*, that is, sheaf of unthreshed grain at each harvest, and the *khalyáni* at the kharif harvest. Besides, he is entitled to the skins of all dead cattle, out of which he makes a handsome profit.

(6) *Chowkidar* or watchman.—He is a Government servant. At present he is variously paid. He usually holds a small rent-free jágír, and is paid a few rupees annually as pay. The zamindar distributes the amount of his pay over the houses of the village, and is held responsible for its collection. The *chowkidar* has assigned to him in many villages a few *máhuá* trees, and also *palás* tree, which fetch him some money in the shape of lac. The *chowkidar* often receives a *panjá* from each cultivator at each harvest; he has, however, no legal claim to this consideration. The Chutiá Nágpur Rural Chowkidari Act (No. V of 1887, B.C.) is being gradually introduced into Palámau, and in some police circles the *chowkidars* are already paid monthly wages by the police, which vary from Rs. 2 to Rs. 3. This system of payment will gradually replace the present one, under which the *chowkidars* are little more than servants of the zamindars.

(7) *Dhobi.*—The *dhobi* is the washerman; he is paid in cash for his services

(8) *Házám.*—The *házám* is the barber. His remuneration consists of two *paseris* of paddy at the *kharif* harvest per every member he shaves; besides, he gets a *panjá* at each harvest. The *házám* is also entitled to various perquisites. at marriage and other ceremonies.

(9) *Purohit.*—The *purohit* is the Brahman priest. Besides his liberal perquisites when he officiates at the family ceremonies, he is entitled to *ángown*, which consists of a small quantity of paddy set apart before the grain is measured and taken away to store.

In parganás Japlá and Belaunjeh, and also in tuppeh Deogán adjoining Gayá, the *bátwárá* system of assessing land prevails. In these parts we meet with the *pátwári.* He is the accountant of the village, and is remunerated by tithes levied from the cultivators. In almost all private estates we find the *baráhil* or the landlord's agent or deputy. "He makes settlements, measures and assesses land, looks after the landlord's own cultivation, and performs generally all the duties of a manager. He is paid by a fixed salary, but more generally he is remunerated by tithes. In some villages, the duties of the *baráhil* are performed by the head ráyat of the village, who is known as the *jeth ráyat.*"

SECTION 10.—*Day-labourers.*

In Palámau, there is a large number of people who live by labour and neither own nor rent land. They may be estimated to form about 15 per cent. of the total population of the subdivision. This class of people is entirely recruited from the lowest castes of Hindus, and the semi-Hinduized tribes, the chief among these being the Bhuiyás, the Ahírs, the Káhárs, and the Dosáds. These are the people who are the first to feel the pinch of scarcity, and call for the largest share of relief in times of famine.

In Palámau, as in Chutiá Nágpur Proper, farm servants are, as a rule, employed by the year, and day wages are paid only at the important seasons when extra labour has to be entertained. Formerly the *kámiá* system of serf-labour used to prevail in Palámau, as well as in the neighbouring district of Házáribágh, but the influence of the British law courts has gradually led to the extermination of serf-labour. For a full account of this species of labour, I beg to refer to Dr. Hunter's Statistical Account of the Házáribágh district, Volume XVI. Of the three different forms of *kámiás* described therein, viz., (1) a *hereditary kámiá*, (2) a *kámiá* for life, and (3) a *chota kámiá*, who is found to serve the master until the debt for which he has entered into the labour-contract with his master is paid off, only the third has survived up to the present day. The contract is made in writing, but the bond no longer gives any claims to the master for possession of the person of his *kámiá.* Bonds (called *saunkhnámás*) are, however, still drawn up, but the condition that the obligee will

work out his debt is usually omitted, and the document is only used to coerce the *kámiá* with the threat of a legal process. The labour of *kámiá* cannot therefore be considered compulsory; and they often avoid the consequences of a legal process by running away from the country. Since Palámau has become the recruiting grounds for labourers for the Assam tea gardens, the employers have awakened to the peril of advancing money to farm servants; and whatever still survives of the old system of bond labour is doomed to die out in a few years.

The amount of loan for which a *kámiá* ordinarily enters into a labour contract of the above character is variable. Rupees 20 may be taken as the average. The *kámiá* is entitled to the customary daily grain wages and perquisites, and is not required to pay any interest for the principal.

The ordinary rates of wages of a labourer (*bonthár*) are three local or *káchchá* seers of grain per diem. The grain may be paddy, barley, maize of any of the millets. In place of these, one and-a-half to one three-fourths seers of rice, or two seers of wheat or gram may be given. Besides in the morning a quarter seer of *sátu* or parched meal is given as *piáo*. The three seers of grain and the *piáo* may be valued at one anna.

At each of the three harvests (*bhadoi*, rice and *rabi*) the farm servant is not paid in grain, but he is entitled in lieu of wages to one out of every 21 sheaves reaped by him, and a bundle of stalks containing from three to six seers of grain. He may thus earn about five maunds of grain in the year besides his grain wages. These five maunds may be valued at Rs. 5; the interest on his loan may be also taken as Rs. 5, and minor perquisites Rs. 2. The grain wages have been valued at one anna a day, or say, Rs. 2 a month. Thus the annual income of a farm labourer may be estimated on the whole at Rs. 36; and his day wages at six pice.

CHAPTER III.

SECTION 1.—*Climate.*

THE duration of each of the three usual seasons of the year—the rainy season, the cold weather or winter, and the hot weather or summer—is the same in Chutiá Nágpur Proper as in Palámau. I only need therefore refer to page 32, section 1, Chapter III, Part I of this Report.

Temperature.—The climate of Palámau is much hotter than that of Chutiá Nágpur Proper, and resembles the climate of South Behar in all respects. The elevated plateaus in the south and south-west of the subdivision enjoy, however, a much cooler climate, approaching that of Chutiá Nágpur Proper. There are only two meteorological stations, but none of them records anything else but rainfall. The mean temperature during the hot weather is said to be about 100°F., which is about 4° or 5° higher than the corresponding means of the Chutiá Nágpur plateau. In winter the temperature occasionally gets so low as the freezing point, and results in frosts. In the summer months the weather is generally very dry and hot; a fierce west wind, known as the *loo*, blows during these months, which is so hot as to prevent outdoor work in mid-day. The morning hours are, however, pretty cool.

Wind.—West winds prevail during the rainy season. At frequent intervals it is interrupted by small cyclonic storms during which the wind veers round, blows in turn from all points of the compass, and is invariably accompanied by rain. During Ásár and Srávan north wind is believed to be a sure harbinger of rain; and so the east wind during the following two months of Bhádra and Áswin.

In the cold weather the prevailing wind is from the west in day and from the east at night. Prolonged cloudy weather accompanied by east wind is particularly feared in the winter months, as it encourages the spread of red and yellow rust on wheat and barley. East winds are also considered saltish and unhealthy to man and beast.

In the hot weather (Cheyt—Jeyt) the prevailing wind is also from the west. It is occasionally interrupted by winds from the north, south and east. The west wind, which is very hot and dry, is considered healthy, whereas the east wind is supposed to bring disease. The latter being, however, cooler and damper is favourable to the *mahuá* harvest.

Rain.—The people of Palámau have not any agricultural aphorisms peculiar to their country. The non-Aryan tribes have certainly none, and the Hindus, who have for the most part recently immigrated into the subdivision from Behar, entertain the same proverbs as those of their original country. The agricultural conditions of Palámau are somewhat different from those of Chutiá Nágpur Proper, the chief point of difference consisting in the comparative importance of *rabi* crops in Palámau and their insignificance in the sister subdivision. The importance of rain in the 12 months of the year is discussed below.

In Mágh rain is beneficial to the *rabi* crops. It is further wanted to soften the soil for ploughing up paddy and *máruá* nurseries, for cotton and *bhadoi* crops generally.

In Fálgun rain is very injurious to all the *rabi* crops, excepting to sugarcane. The injury to the *rabi* crops is indicated by the proverb "Fagoon barsho, ghar huse jai," that is, in the event of rain in Fálgun, more goes from the house than comes into it. The *rabi* crops are nearly ready for the sickle, and are hence largely damaged by rain.

The three months of Cheyt, Bysák and Jeyt should be dry and hot, as it would then indicate plentiful rain in proper time. Heat in these months is necessary to burn up grass, weeds, &c., and is hence wished for.

The rains should commence about the end of Jeyt or beginning of Ásár, and should continue till the middle of Áswin. During the three astral periods of *hátiá*, *chitrá*, and *swáti* which follow in order and occupy the remaining half of Áswin, and Kártic there ought to be two or three showers of rain at intervals of ten days or a fortnight. The intervals of dry sunny weather will allow the rabi lands to dry up and be prepared for sowing, while the few showers will serve to keep the paddy in full growth, and where means of irrigation do not exist, are absolutely essential to it.

Rain in *hátiá*, which usually occupies the second and third weeks of Áswin, is, however, injurious to cotton, which flowers about this time. A heavy shower beats off flowers, and thereby reduces the yield of cotton.

In Áughrán and Paus rain is much wished for for the *rabi* crops. A few showers at intervals of a fortnight or three weeks are all that is necessary. It is said that rain in Áughrán brings a 2-fold *rabi* harvest, in Paus 1½-fold, and in Mágh 1¼-fold. Although rain in any one of these three months accompanied by drought in the remaining two is of little good, the above shows the relative necessity of rain in the cold-weather months.

Prolonged wet weather in these months is, however, fraught with evils to the *rabi* crops, as also to cattle. It gives rise to various insect and fungoid pests. In Palámau cattle depend almost entirely on outdoor feeding, and if prevented by continued wet weather from turning out, the weaker ones readily succumb and die off. In the winter of 1887 large numbers of cattle were lost in this way.

The following statement summarizes what has been said above respecting rainfall, and shows whether, and how much, rain is wanted in each month of the year:—

Period (vernacular).	Period (English).	Quantity of rain.	REMARKS.
Mágh	January-February ...	One or two showers	For *rabi* crops; and also for ploughing lands for *bhadoi* crops—cotton, paddy and máruá nurseries.
Fálgun	February-March ...	No rain	Rain is very injurious to the *rabi* crops, which are almost ripe now; but good to sugarcane.
Cheyt ... ... Bysak ... ... Jeyt	March-June ...	Ditto	Dry heat is wanted to burn grass and weeds. Rain is, however, good for sugarcane. Rain injures máhuá, and so do hailstorms.
Ásár ... ... Sraván ... ... Bhadro ... ... Áswin (1st quarter)	June-September (3rd quarter).	Copious rain, better at short intervals.	For all the *bhadoi* crops and lowland paddy.
Áswin (rest of) ... Kartic	September (4th quarter)-November.	Occasional showers	For lowland paddy, and also for preparing *rabi* land. Too much rain in Kartic is very injurious to paddy.
Aughrán	November-December.	One or two showers	Good for the *rabi* crops.
Paus	December-January	Ditto ...	Ditto ... Too much rain in Aughrán and Paus gives rise to disease in wheat and barley; and is also very injurious to cattle.

The following table, showing the mean rainfall of each month for the 10 years ending with 1888, may be considered as representing the amount and distribution of rainfall in a normal year:—

Table of mean rainfall for 10 *years* 1879—1888.

MONTHS.	Quantity of rainfall in inches.
January	·86
February	·37
March	·67
April	·10
May	1·10
June	4·87
July	12·45
August	12·37
September	7·89
October	2·93
November	·63
December	·28
Total	51·52

This table read in the light of the preceding statement should enable us to judge whether the rainfall in any particular year has been sufficient and well distributed. On turning to the statistics of rainfall in Appendix II to this part of the Report, and comparing the distribution of rainfall in the year 1873-74 with that of the normal year, it will be at once apparent that the singular deficiency of rain in September and October of 1873 (·65 and nil against the normals 7·89 and 2·93) must have resulted in almost total loss of the winter paddy and largely prevented the sowing of *rabi* crops, while the rains which liberally fell in January and February of the succeeding year must have been very favourable to what little of the *rabi* crops had been sown in the autumn of the preceding year.

There are only two rain-recording stations in Palámau—one at the head-quarters station of Daltonganj, and the other at Hosseinábád.

SECTION 2.—*Soils.*

The village lands are primarily distinguished into lowlands, devoted to the wet cultivation of paddy, and uplands. The subdivisions of each of these two classes are treated below.

Lowlands.—The lowlands are situated either in river valleys like those of the Són, the Ámánát and the Koel, or between contiguous ridges of uplands. At the head of the sloping terraces of paddy land is situated the *áhrá*, or embanked reservoir, which serves to irrigate the fields lying below. The lowlands are spoken of as *dohar*. First class rice land is known as *jah*, *áchhá*, or *áwal;* inferior rice lands as *doem*, *suem*, *cháháram*, according as they belong to the 2nd, 3rd, or 4th class of such lands. High-lying paddy terraces which cannot be irrigated from an *áhrá* are spoken of as *chátar* land, and being very precarious, fetch much lower rents. *Soti* (from *sot*, a current) is a narrow strip of lowland running between two close ridges of uplands.

The different classes of soil met with in *dohar* lands are:—

(1) *Kewál.*—It is usually a black friable clay, retentive of moisture, and the most fertile soil of Palámau. It is abundantly found in the broad river valleys. *Kewál* is also found in uplands, especially in the central tuppehs, but is never very deep. Its colour shows its wealth of decomposed vegetable matter, to which as well to its power of retaining moisture it owes the greater portion of its fertility. *Kewál* fields generally bear a second crop of *khesári* after the paddy has been harvested.

A white variety of clay soil, much inferior to black *kewál*, occurs in places, and is known as *gáriá kewál*. It dries up more quickly, and is liable to shrink and crack into hard bricks on drying.

(2) *Durasá*—Is a soil intermediate in character between *kewál* and *pá-ur*.

(3) *Pá-ur*—Is considered the worst of all rice lands. It is a sandy loam of light colour, and is very liable to the effects of drought.

The lowlying terraces generally contain *kewál* and *durasá* soils, and the high-lying ones (*chátar*) contain *pá-ur*. Besides, the lower terraces remaining naturally moist for a longer time and being easier of irrigation, are held in much greater esteem than the *chátar* lands.

Uplands.—The village uplands are distinguished into several subdivisions, viz.,—

(1) *Bári* or lands immediately surrounding the homestead. Each *bári* or homestead includes a few *cottahs* of land. It is invariably fenced in by a high paling of sticks which serve as support for various vegetable creepers. *Bári* lands are usually the most fertile lands in the village, as it gets all the washing and manurial refuse of the homestead.

The more valuable crops are grown on such lands, such as maize, *máruá*, mustard, wheat, and barley, and where facilities for irrigation exist, various cold-weather vegetables are also raised.

(2) *Bheetá* or *báhársi* lands include the outer ring of uplands adjoining the village. These are almost exclusively devoted to *rabi* crops—wheat, barley, gram, lentils, linseed, &c. Among the *bhadoi* crops, *urid* and *barai*, and among the *kharif* crops, *kurthi* are occasionally grown on *báhársi* lands, but in this case, no *rabi* crop is grown in the same year. Where *bheetá* lands are sufficiently low, and water is available for irrigation within 2 fathoms of the surface of the ground, they are cropped with sugarcane. *Bheetá* lands are seldom left fallow, unless prolonged drought in the autumn months prevent their preparation and the sowing of *rabi* crops.

(3) *Tánr* is jungle land or land recently reclaimed from the jungle. It is seldom cultivated for more than two or three successive seasons, after which it is allowed to revert to jungle. *Tánr* lands are cropped with the inferior millets—*gondli*, *kodo* and *sáwán*—and *til* or gingelly.

Besides these three classes of uplands met with in every village, they are further distinguished by other names which indicate some special characters. Thus uplands forming the basin of an *áhrá* are known as *doob* (literally submerged) lands. *Doob* lands remain under water during the rains, and are sown with wheat after the *áhrás* have been emptied in October for irrigating the paddy lands lying below them. They are naturally very fertile and require no irrigation. Again, *alluvial* lands on the banks of rivers are spoken of as *dhábi* or *pán* lands. These are also very fertile and are cropped with various *rabi* crops and vegetables.

The prevailing soils of the uplands are:—

(1) *Kewál*, the same as in the lowlands. It is very well suited to cotton and wheat.

(2) *Durasá*.— } The same as in the lowlands.
(3) *Pá-ur*— }

(4) *Lálmáti* or *Geriá*—Is the red ferruginous sandy soil so abundant in the uplands of Chutiá Nágpur Proper. It is met with only in the southern *tuppehs* adjoining the Chutiá Nágpur plateau, and also found overlying the gneissic hillocks and ridges in the north-west of the subdivision. It is naturally a poor soil.

(5) *Rehrá* is a barren soil underlaid by gravels which draw away its moisture, and together with it its manurial ingredients. It is of course the worst of all upland soils.

The subdivision of Palámau may be broadly distinguished into two zones which are interlaced with one another. The first zone comprises the valleys of the Ámánat, the Koel, and the Són, and contains level stretches of fertile clay, covered with paddy, sugarcane and various *rabi* crops. This zone may be considered as narrow radiating spurs thrown from the great Gangetic plain of Behar which it resembles in almost every respect. It is mainly inhabited by the Aryans. The second zone comprises the hilly tuppehs which generally support a thin soil, gravelly and loose in character. There is very little of paddy cultivation in this zone, and the non-Aryan population which preponderates there depends in a large measure on the *bhadoi* crops for their sustenance.

SECTION 3.—*Manures.*

The following are the different classes of manures used in Palámau :—

(1) Cowdung.
(2) Sheep's dung.
(3) Ashes.
(4) Scrapings of cattle sheds.
(5) Mud from old tanks.

Each of these is separately treated of below.

(1) *Cowdung.*—As in Chutiá Nágpur Proper, every ráyat in Palámau has a manure heap into which are daily thrown the cleanings of the cattleshed and every manner of house-refuse, excepting ashes, which are kept in a separate place. The manure is kept on bare ground and not in pits, as it is done in Chutiá Nágpur Proper. There is no doubt that a considerable portion of it is wasted, but as the wash of the manure heap flows over the *bári* land, the latter is benefited by the waste.

Farm-yard manure is applied only to paddy and *máruá* nurseries, and in heavy doses to sugarcane. These are practically the only crops, besides vegetables, which receive any manures. The paddy and *máruá* nurseries are sown in Jeyt and Ásár; all dung collected from this time up to the corresponding period of next year is scrupulously reserved for the nurseries. If sufficiently dry, the dung is made up into cakes, called *gointhás*, which are thickly spread over the seedbeds and are then reduced to ashes, previous to the sowing of the seed. For paddy nurseries, the dung may be applied to the land and need not be burnt down; but *máruá* seedlings will not come up unless the dung has been previously reduced to ashes. These latter are mixed up with the soil by a light ploughing or two, and on the mixed ashes and soil the seed is scattered broadcast.

The rabi crops, *barai* and *urid*, which are grown on *bheetá* lands, are occasionally manured with droppings of cattle herded on them for several nights. The cattle are tied two and two by the legs and watched by the *rákhowá* or cowherd.

Cowdung is not a marketable article in Palámau. The ráyats produce their own manure, and neither buy nor sell it. The supply of cowdung is very limited. The larger herds of cattle are driven up the hills and kept away from the village during a considerable portion of the year, and consequently the manure produced by them is lost to cultivation. The supply has been further diminished by gradual extension of cultivation and by heavy loss of cattle through epidemics. The position of Palámau in respect of the supply of manure is exactly the same as that of Chutiá Nágpur Proper. I have treated the subject more fully in Part I, to which I beg therefore to refer.

(2) *Sheep's dung.*—It is a general practice with sugarcane growers to have a flock of sheep herded for several nights on lands intended for sugarcane. The *Gáreris* or shepherds have to be fed, and given a few annas as *piyái* or drink as their remuneration. *Bári* lands intended for maize, seedbeds of paddy and *máruá*, are also manured with sheep's dung by ráyats who can afford the expense of feeding the shepherds.

(3) *Ashes.*—The ashes produced in the household are kept separately from the general manure heap. They are applied to *bírás, i.e.*, paddy and *máruá* seedbeds, and also to sugarcane when the ráyat grows any. The people of Palámau do not take the same trouble of collecting dung and leaves for manuring their fields as the ráyats of Chutiá Nágpur Proper usually do.

(4) *Scrapings of cattle sheds.*—These are known as *gothar* and made use of by ráyats having a large number of cattle. The earth of the floor of the cattle-shed is scraped off to a depth of a couple of inches and applied to paddy-fields.

(5) *Pond mud*—Is rarely used in Palámau; when used, it is applied to sugarcane lands, and also to paddy-fields which are considerably improved by it.

The use of oilcakes or of any chemical manure is yet wholly unknown in Palámau. For potatoes, which yield abundantly and profitably with liberal manuring, the only manures used are cowdung and ashes. I need not reproduce here my remarks regarding the utilization and supply of manure in Part I of this Report.

SECTION 4.—*Agricultural Implements.*

The agricultural implements in common use in Palámau are the following:—

(1) The *hár* or plough.—Figure I represents the plough used in Palámau. It differs in the shape of its body from the plough used in Chutiá Nágpur Proper, as will appear from a comparison of the figure with that of the latter given on page 49, Part I.

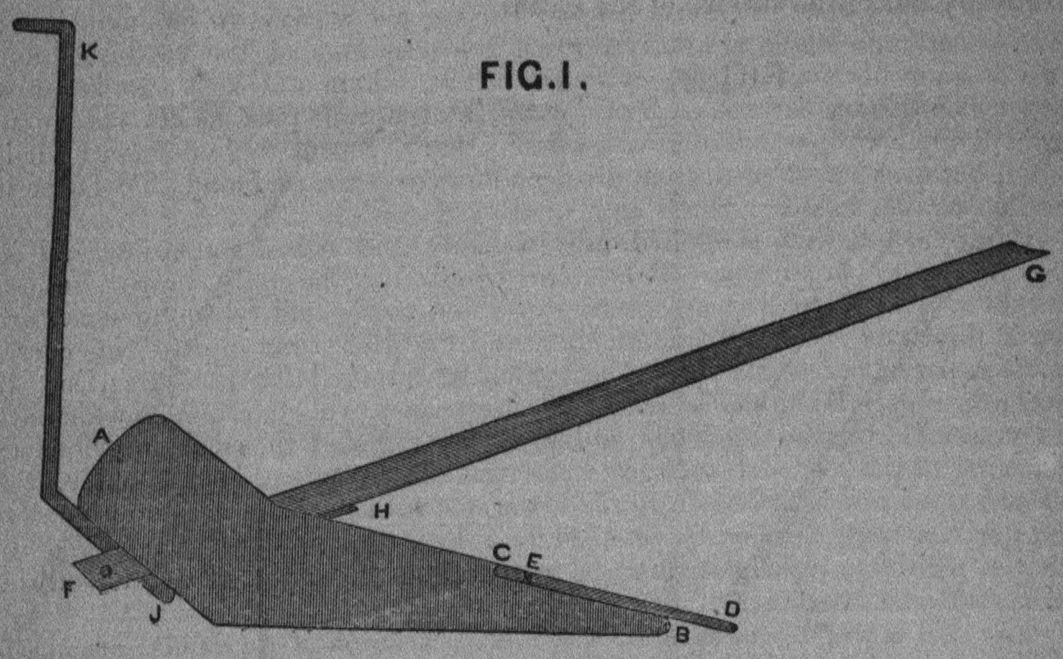

The several parts of the plough are:—(1) the *hár*, or the body, about 40 inches long. It is usually made of the *sâl*, *barhul*, *dheotá* or *khayer* wood. It requires to be renewed once, twice or even oftener in a year, according to the nature of the soil. Rocky soils wear out the sides of the body sooner, and hence necessitate more frequent change of the body, than soft soils. The *hár* usually costs 2 annas a piece; (2) the *phariád*, or the handle, about 2 feet long; (3) the *harish*, or the beam of the plough, about 8 inches long; the *phariad* and the *harish* cost between them about 4 annas, but they are usually made by the ráyats themselves; (4) the *joát* or yoke, made by the carpenter, costing 4 annas; (5) the *nádhá*, or leather-thong used for tying the beam to the yoke, made by the *chámár*, costing 1 anna; it is sometimes made of sunn-hemp for cheapness' sake; (6) the *phár* or ploughshare, varying in length from 1 foot to 18 inches, and weighing about 1½ *pákká* seers. It has to be repaired at frequent intervals, especially when used in hard gravelly soils. Every two or three days during the working season it is taken to the village blacksmith to have the edge put on, and at intervals of a fortnight or three weeks new iron has to be added on to the end to keep the share at its proper length. The ráyat pays for the iron in cash, and for repair and renewal of the share the blacksmith or *lohár* is paid at the rate of one local maund of grain per plough per annum. The *hár*, or body of the plough, is likewise made by the carpenter or *burhi* in consideration of one local maund of grain per annum per plough. The *burhi* has also to be fed morning and evening on the days that he may be employed by the ráyat.

(2) The *tariá* or the drilling plough.—The *tariá* is a small plough, usually an ordinary plough, the body of which has been worn out by use. A hole is made vertically through the body of the plough, a little in front of the beam; through this hole is passed the hollow stem of a thin bamboo, about 3 feet long, with one end opening into the furrow underneath the body of the plough, and the other open at the top to receive the seed. Two men are usually required for drilling with the *tariá*—one to hold the plough, and the other to put in the grain. A skilled ploughman can, however, do both the work at the same time. Wheat and barley are invariably drilled in by the *tariá*; gram and lentils are drilled only in case when the soil is not sufficiently moist.

(3.) The *hengá* or combined clod-crusher and leveller.—The *hengá* is a long block of wood about 10 feet long and of square section about 4 inches each side. It is represented in Figure 2. It is drawn by two pairs of oxen, one yoked to each end. The *joát* or yoke at either end is connected with the *hengá* by an iron chain or, in its absence, by a thin bamboo and leather strings. Within a few inches of either end is a hole right across the block of wood; the chain is passed through it from underneath, and fastened on the top by means of a small cross bar. Through the holes are also passed two wooden pegs (C, C′) which stand vertically out of the surface of the block.

FIG. 2.

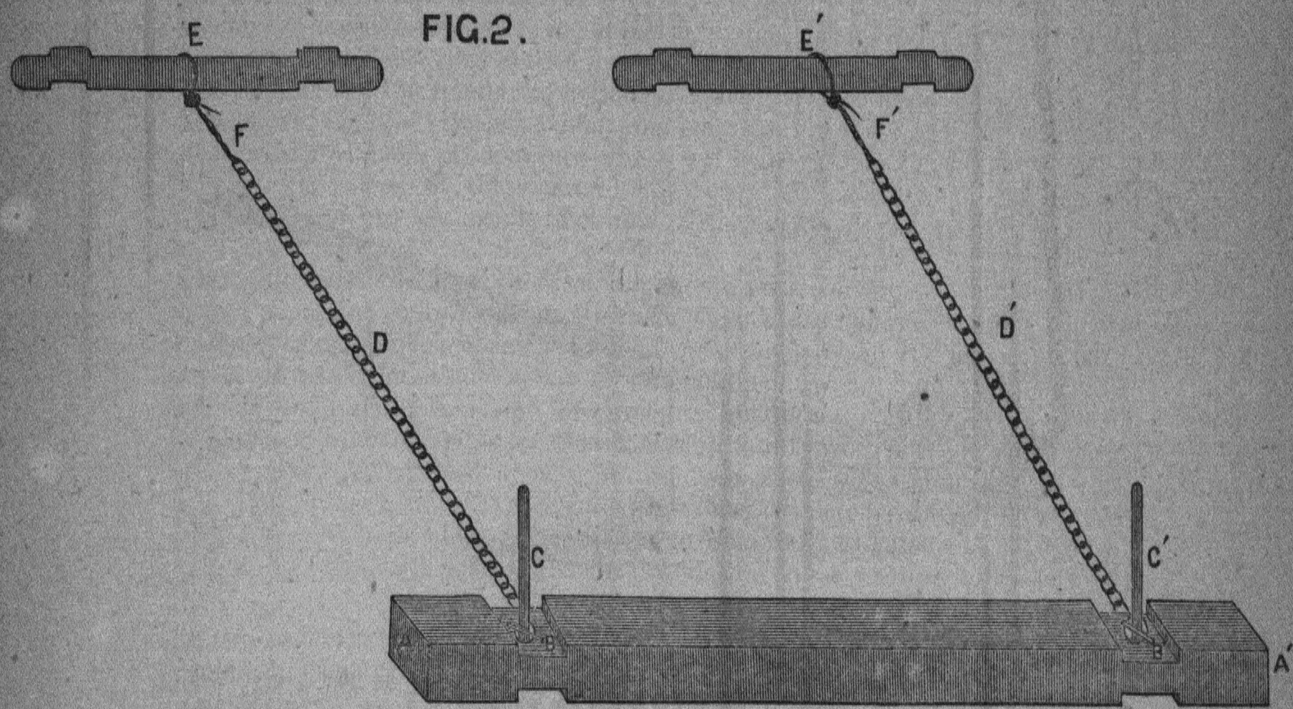

When the *hengá* is used to crush clods and press the soil, it is driven with the pegs standing up, the drivers standing on the block to add their weight to it. When it is wanted to level the ground by removing the soil from one part of the field to another, the pegs C, C′ are pressed against the ground by the weight of the drivers standing on them. The soil is carried forwards to the desired place, when the men let off the pegs, which naturally come up again to the surface.

The *hengá* costs from 12 annas to Re. 1 according to its length and the thickness of the wood; the chains cost about a rupee per pair. The yokes, etc., are the same as those used for the plough.

(4) The *kurrur*, or earth remover, is the same implement as the *khárá* of Chutiá Nágpur (*vide* page 50, Part I.)

(5) *Mugáru* or mallet, the same as the *dhelphurá* of Chutiá Nágpur (*vide* page 50, Part I).—It is used for reducing the larger clods in the field, which could not be broken by the *hengá*. The blunt side of a *tángi* or axe is often made to do the work of the mallet.

(6) The *hánsuá* or sickle.—Price about one anna.

(7) The *básilá* or axe costing from 8 annas to Re. 1.—It is in constant use by *burhis*, and also by ráyats who know how to make their own ploughs.

(8) The *rákuná* or chisel used by carpenters, and also by ráyats for making the plough.

(9) The *khurpi* or *pháuri* is a small spade or hoe used to hoe maize, cotton, poppy, etc. The share is about 4 inches long by 3 inches broad. It is plied by one hand, and costs 1½ annas.

(10) The *pháurá* is the same as the *kori* of Chutiá Nágpur. It is a large-shared spade fitted with a long handle. The average size of the share is 8 inches long by 6 inches broad. The implement costs from 8 annas to Re. 1.

(11) The *ákáin* is the same as is used in Chutiá Nágpur. It is used for turning up straw in threshing paddy and other crops. In Palámau the top of the *ákáin* is seldom fitted with an iron hook as is invariably the case in Chutiá

Nágpur. Instead of this the *ákáin* consists simply of a straight bamboo twig with a natural hook at its end.

(12) The *tángi* or axe used to cut wood; also as a defensive weapon by people travelling through jungle. It costs about 2 annas per every *kachchá* seer of iron and weighs from 1 to 3 seers.

SECTION 5.—*Irrigation.*

WHILE irrigation may be said to be practically absent from the arable cultivation in Chutiá Nágpur Proper, it is a common practice in its sister sub-division of Palámau. Almost every paddy-growing village in the valleys of the larger rivers and in the flat country in the north of the sub-division has one or more *áhrás* or reservoirs of water, without which the cultivation of paddy can never be carried on in safety. The distribution of rainfall in the Palámau sub-division is apt to be often irregular and uncertain, especially towards the close of the rainy season in October, when the paddy crop requires plentiful moisture in the soil for its maturity. The provision of water for irrigation during this period of the year has therefore come to be regarded as a *sine quâ non* of paddy cultivation.

In respect of the necessity for irrigation, there is an important difference between Chutiá Nágpur Proper and Palámau. In the former paddy is grown in the sides and bed of long drainage hollows which cover the entire surface of the country, and the withholding of rain for a length of time can affect the crop grown only on the higher terraces, while the more important portion of the crop which is grown lower down the hollows is left practically untouched by drought unless the latter extend over a very considerable period. In Palámau on the other hand, the paddy-growing tracts are much more level, and a drought is calculated to affect more or less all paddy-fields whether high or low.

The chief sources of irrigation are the following in order of importance:—

1. *Áhrás or reservoirs.* These *áhrás* are made by throwing embankments across drainage hollows, as is done in Chutiá Nágpur Proper, but more often across the natural slope of the fields to interrupt the surface drainage. They are of various sizes and calculated to water from one or two up to as many hundred bighas of paddy land. The embankment is made of earth dug up from the bed of the *áhrá*, and is usually about six feet high and four or five feet broad at the top It may be of any length according to the capacity of the reservoir. The embankment is usually pierced through by two or more, usually three, tubular holes lined with burnt earthen tiles. These holes are stopped with plugs made of mud and straw, which are taken off when it is required to let out the water for irrigation.

The debouching holes are kept closed during the rainy season. At this time there is usually no necessity for irrigation; but in the event of the monsoon rain holding off for a length of time in August and early September, when the transplating operations are in their full vigour, it is found necessary to let out water in order to restore sufficient water in the paddy-fields which require to be made into puddle before the seedlings can be transplated. The occasion for irrigation of paddy-fields does not, however, usually arise until some days after the monsoon is over. After the required quantity of water has been taken off by opening one or more holes, these latter are again closed, and kept so until the necessity for a second irrigation may arise.

The number of waterings required by paddy during the latter part of its growth depends entirely on the distribution of rainfall during the months of September, October, and November. In a year of well-distributed rainfall, no irrigation may be required, while in a year like 1888-89, when there was little or no rain since the 20th of September till the close of the paddy harvest, three or four waterings will not be considered too many.

After the irrigation of paddy is over, the remainder of the water, if any, is drained off, and the bed of the reservoir, which is moist and fertilised with the sediment brought from the lands lying higher up, is thrown under wheat and other spring crops. Land forming the bed of *áhrás* is known as *doob* (*literally submerged*), and is highly valued for spring crops It is almost invariably held *khás* by the owner of the village, and if let out to tenants, fetches a much higher rent than ordinary *rabi* lands.

The *áhrás*, as I have said before, are a necessary appurtenance of all paddy-growing villages in Palámau, and on them depends in a large measure the prosperity of the people. But unfortunately many of the reservoirs have become silted up, or rendered useless through want of repairs owing to the insolvency of zamindárs. The duty of keeping the embankments in proper order rests entirely with the latter. Any temporary breaches in the embankments that may be caused at the time of irrigation are, however, repaired by the ráyats of the village.

2. *Wells.*—Well-water is used in Palámau for the irrigation of vegetables, sugarcane, and poppy. These crops are grown in small plots of land adjoining the village site, and are watered, as a rule, from permanent wells. The cultivation of sugarcane is, on the other hand, shifting and require annual change of land. A number of ráyats combine together for the purpose of this cultivation, and make one or more *kachchá* wells in different corners of the field. These wells are very narrow and shallow and do not cost more than a couple of rupees each. They are meant to last only for a year.

The *láthá* (described in page 45, Part I) is in variably used for lifting water from wells. The wells being comparatively shallow, the levers of the *láthás* are much shorter than those used in Chutiá Nágpur Proper. In Palámau, two, three, and sometimes even four, men are found to be working side by side with as many *láthás* at the same well.

Besides the crops already mentioned, wheat is occasionally irrigated from wells, but the absolute area of wheat under irrigation is very small indeed. Patches of wheat grown in the immediate vicinity of village wells can afford to be irrigated at all.

3. *Rivers and hill streams.*—These are seldom utilised and irrigated.

Cost of irrigation.—Irrigation of paddy fields from an *áhrá* or reservoir is effected by simple gravitation, and its cost per acre is naturally very little. When an *áhrá* has been opened for irrigation, all the ráyats who have claims upon the *áhrá* remain present on the scene in order to regulate the supply of water in their respective fields, and mainly to see that they are not defrauded of their share of water by their neighbours. Disputes in connection with the distribution of water often arise, to prevent which some zamindárs employ *baráhils* or agents who undertake to do all the irrigation and do not allow any of the ráyats to come near the scene.

An average sized *áhrá* filled with three openings will irrigate about 1 acre of land in a day.

The cost of irrigation from a well about four fathoms deep has been detailed in Part I (page 46). It comes to 11 annas per acre. From shallow wells one to two fathoms deep as are frequently met with in sugarcane fields, the cost of irrigation is reduced to about half the above sum.

Improvement of irrigation in Palámau.—Although the sub division is provided with a very large number of *áhrás* or reservoirs, many of these have become nearly useless for want of repairs. The zamindárs, whose duty it is to keep the *áhrás* in proper working order, have mostly become involved in debt, and neglected their duty in this respect. So far the agriculture of the sub-division may be said to have a retrograde tendency. To enforce on the zamindárs the duty of keeping the village reservoir in proper condition, the mere force of custom appears to be insufficient and should be strengthened by law. The tendency of the modern law courts is to discount custom; and while the zamindár can compel the payment of rent by suing his tenant in a court of law, the latter has no legal means at his disposal whereby he may compel his landlord to fulfil these customary duties (among which is the repairing of the village reservoir) on the performance of which the stability of agriculture depends.

Besides tanks and *áhrás*, there is also a certain field for the construction of irrigation canals. There are two tracts that I know of which may be effectively watered by canals. The first of these is the valley of the Ámánat—a flat and fertile strip of country, surrounded by hills on three sides. Numerous perennial streams descend from these hills into the valley on their way to join the Ámánat. These may be dammed up at convenient heights, and their water turned over the surface of the valley through a suitable system of canals and distributaries. The second tract is also a narrow strip of plain, alluvial country formed by the Son, north of the hill range which runs parallel to the river

from Mahárájganj on the east to Sonpurá on the west. This tract is run through by many parallel streams which rise in the hills to the south and meander through the plains on their way to join the Són. Many of these streams may be turned to very good account as sources of water for small irrigation canals

SECTION 6.—*Crops grown.*

I.—Cereals.

1. Winter paddy (*Oryza sativa*).
2. *Gorá* or *bhadoi* paddy (*Oryza sativa*).
3. Maize (*Zea mays*).
4. *Máruá* (*Eleusine corocana*).
5. *Sáwán* (*Panicum frumentaceum*).
6. *Kodo* (*Paspalum scrobiculatum*).
7. *Gondli* or *Menjhree* (*Panicum miliare*).
8. Wheat (*Triticum saticum*).
9. Barley (*Hordeum vulgare*).
10. *Chine* (*Panicum miliaceum*).

II.—Pulses.

1. *Urid* (*Phaseolus roxburghii.*)
2. *Barai* (*Phaseolus mungo*).
3. *Rahar* (*Cajanus indicus*).
4. *Kurthi* (*Dolichos biflorus*).
5. Gram (*Cicer arietenum.*)
6. Lentils (*Ervum lens*).
7. Peas (*Pisum sativum*).
8. *Khesári* (*Lathyrus sativa.*)

III.—Oilseeds.

1. Mustard and rape (*Brassica, campestris* and *rapa.*)
2. Gingelly (*Sesamum (ndicum*).
3. Castor (*Jatropha curcas*).
4. Linseed (*Linum usitatissimum*).

IV.—Fibre crops.

Cotton (*Gossypium herbaceum*).

V.—Garden crops.

The same as enumerated in page 50, Part I.

VI.—Miscellaneous crops.

1. Sugarcane (*Saccharatum officinarum*). 2. Poppy (*Papaver somniferum*).

SECTION 6A.—*Harvests.*

The arable crops of the Palámau subdivision may be classified under the three harvests, *bhadoi*, *kharif*, and *rabi*, as under—

Bhadoi.

1. *Makai* (Maize, *zea mays*).
2. *Máruá* (a millet, *Eleusine corocana*).
3. *Sáwán* (a millet, *Panicum frumentaceum*).
4. *Gondli* (a millet, *Panicum milion.*)
5. *Gorá dhan* (upland paddy, *Oryza sativa*).
6. *Urid* (a pulse, *Phessolus roxburghii*).
7. *Barai* (a pulse, *Phessolus mungo*).

Kharif.

1. *Aghániyá dhán* (winter paddy, *Oryza sativa*).
2. *Kodo* (a millet, *Paspalum scrobiculatum.*)
3. *Urid* (a pulse, *Phaseolus roxburghii*).
4. *Kurthi* (a pulse, *Dolichos biflorus*).
5. *Kápás* (cotton, *Gossypium herbaceum*).
6. *Til* (gingelly, *Sesamum indicum*).

Rabi.

1. *Goham* (wheat, *Triticum sativum*).
2. *Java* or *Jan* (barley, *Hordeum vulgare*).
3. *Chine* (a millet, *P. miliaceum*).
4. *But* (gram, *Cicer arietenum*).
5. *Masuri* (lentils, *Ervum lens*).
6. *Khesári* (a pulse, *Lathyrus sativum*).
7. *Rahar* (a pulse, *Cajanus indicus*).
8. *Matar* (peas, *Pisum sativum*).
9. *Tisi* (linseed, *Linum usitatissimum*).
10. *Sarsan* (mustard and rape, *Brassica campestris* and *B. rapa*).
11. *Ketári* (sugarcane, *Saccharatum officinarum*).
12. *Postá* (poppy, *Papaver somniferum*).
13. *Renri* (castor, *Jotropha curcas*)
14. *Máhuá* (*Bassia latifolia*).

As regards the relative importance of the three harvests, and the crops included in them, I can offer at best a conjecture in the entire absence of statistics of any kind based on actual survey. Among the food-crops, the most important

is, no doubt, the rice-crop, which may be said to form about half the food-stuff of the subdivision. But its importance as a food-crop varies within very wide limits in different parts of the subdivision; thus, while winter rice may be the only cereal food known in the plains forming the chief river valleys, its cultivation dwindles away in the hilly parts of the subdivision, where the people depend almost exclusively on the coarser produce of the *bhadoi* harvest.

Of the other half of the food grown in the subdivision, the *bhadoi* crops, including the millets and maize, may claim a share to the extent of three-eighths, and the *rabi* crops, including wheat, barley, gram, lentils, rahar, peas, *khesári* and *máhuá*, the remaining one-eigth. But as I have already said, the *bhadoi* crops vary in their importance in an *inverse ratio* to winter rice, and in the hilly tracts constitute almost the entire food of the population. The cultivation of the *rabi* crops generally increases with that of the winter paddy, but is held to be always subordinate to the latter. Paddy is grown wherever facilities for irrigation permit its cultivation, and only those lands that are either too high-lying to come within reach of water from the village *áhrá*, or are incapable of paddy cultivation such as *doob* land forming the bed of the reservoirs, are reserved for coldweather cultivation.

The relative importance of each of the crops enumerated above will be treated of later on in the section devoted to its cultivation.

SECTION 6B.—*Rotation.*

There is no fixed law of rotation followed in Palámau. The paddy lands are meant to grow only paddy year after year, and the rule generally followed in Chutiá Nágpur Proper of alternating broadcasted paddy in one year with transplanted paddy in the next is not observed in Palámau. High-lying paddy lands called *chátar dohar*, which grow the earlier varieties of paddy ripening in September and October, are, however, occasionally sown with *rabi* crops, but such double cultivation is possible only when the soil has been sufficiently moistened by rain to enable its being ploughed up for the *rabi* cultivation.

The outlying uplands (*bheetá*) are reserved for the cultivation of *rabi* crops, and as a rule do not grow any *bhadoi* or *kharif* crop, or if they do so, they are allowed to lie fallow during the cold weather. Such lands therefore grow only one crop in the year. Among the *rabi* crops grown on such lands, there is no fixed rule of rotation. The principles of rotation are, however, so far understood and followed that no *rabi* crop, either cereal or pulse, is grown on the same land for more than two or three years, but it is always followed at the end of such period by another *rabi* crop possessed of a different character of growth.

The *bári* lands or those adjoining the homesteads are naturally fertile, and produce two crops in the year, viz., a *bhadoi* crop like maize, *barai*, and occasionally *máruá*, and a *rabi* crop like wheat, mustard or *rahar*. As a rule, maize and wheat as being the most valuable of the crops of the *bhadoi* and the *rabi* harvest respectively are grown on such lands.

The village *tánr* lands, *i.e.*, those lying furthest from the village site, and consisting mostly of fallow lands and new jungle clearings, grow inferior *bhadoi* and *kharif* crops such as *kodo*, *sáwán*, *gondli*, and cotton. These lands are never cultivated for more than two or three years at a time, and two systems of rotation are usually followed on such lands. These are—

(1)	First year ...	... Cotton (jungle being cleared and burnt to ashes.)
	Second „ ...	... Gingelly.
	Third „ ...	... *Kodo* or *sáwán* with or without *rahar*.
(2)	First „ ...	... Gingelly.
	Second „ ...	... *Kodo* or *sáwán* with or without rahar.
	Next two to four years	... Fallow.

In the second rotation, a crop of *sáwán* may be taken in the third year if the land has been manured by herding cattle on the land.

SECTION 6C. I.—CEREALS.

1. Lowland Paddy.—*Don* or *dohar dhán.*

Varieties.—The varieties of *dohar dhán*, which are very numerous, fall under the following two classes:—

(1) *Lahuhan* or *korehan* rice, that is, rice of lighter growth—the same as in Chutiá Nágpur Proper. This class includes the three sub-varieties of paddy known in Palámau as *siri*, *sáhil*, and *bakar*. The

lahuhan varieties are all grown on *chátar dohar*, that is, high-lying paddy fields are sown broadcast in Jeyt-Ásár (June), and are reaped in Áswin (September—October). All the varieties afford coarse rice. These varieties of paddy should be, properly speaking, classified under the *bhadoi* harvest; but as their cultivation differs in no important respects from that of the late *aghániyá* varieties, I have described both late and early rice in the same section.

(2) *Guruhan* or *aghániyá* rice—the same as in Chutiá Nágpur Proper. These include late varieties grown in *gárhá dohar*, that is lowlying paddy-fields; they admit of being either sown broadcast or transplanted, and are reaped in Áughrán (November—December).

Lahuhan rice does not possess in Palámau the importance which it has in Chutiá Nágpur Proper. About one-sixth of the total paddy lands may be estimated to be under *lahuhan* rice, the remaining five-sixths being under the later varieties. Ripening as they do in October, they occupy an intermediate position between the *bhadoi* and the *kharif* harvests, and may be more appropriately spoken of as autumn paddy.

Methods of cultivation.—There are in Palámau, as elsewhere, two methods of growing lowland rice, viz., (1) that of broadcasting the seed in Jeyt-Ásár, and (2) that of raising the seedlings in a nursery or seedbed, and subsequently transplanting these latter in the field. As has been said before, the three varieties of *siri*, *sáhil*, and *bakar*, constituting the *lahuhan* division of paddy in Palámau are always sown broadcast, and with regard to the *aghániyá* or *guruhan* varieties of paddy, it is optional with the cultivator to sow the seed broadcast or to raise seedlings and transplant them later on in the field. The method of transplantation is, however, more in vogue in Palámau than that of broadcasting in respect of the *aghániyá* varieties of paddy; the former is in particular the rule with the finer varieties of paddy which are grown in very lowlying fields.

A.—Broadcasted Paddy.

(*Buná dhán.*)

The cultivation of broadcasted paddy in Palámau does not materially differ from that in Chutiá Nágpur Proper. The only differences I have noticed are the following:—

(1) The use of cowdung and ashes for broadcasted paddy is insisted upon in Chutiá Nágpur Proper. In Palámau, the reverse is the case, much more importance being given here to the seed-beds for transplanted paddy, which virtually monopolise (together with maize, *máruá* and sugarcane) the whole of the manurial supply of the cultivator.

(2) The actual methods of broadcasting are the same in both the subdivisions; but the practice of *lewá-buná*, described in page 56, Part I, which is resorted to in Chutiá Nágpur Proper only in cases of emergency, is commoner in Palámau than *dhuri-buná* and *rash-buná*. The last two systems consist in sowing the seed on dry and moist soils respectively which have been previously pulverised by repeated ploughings and harrowings, and the first (*lewá-buná*) in broadcasting the seed on soil which has been reduced to the condition of puddle by being worked under water.

(3) The practice of *bidháli*, described in page 56, Part I, which consists in a light ploughing up and harrowing of the broadcasted paddy with a view to destroy weeds, is not known at all in Palámau; nor is hand-weeding given unless the crop is found to be too much infested with weeds.

B.—Transplanted Paddy.

(*Ropá dhán.*)

The cultivation of transplanted paddy is carried on in precisely the same manner as in Chutiá Nágpur Proper. The method of raising the seedlings in

either of the two kinds of seed-beds known as *matiháni-birá* and *leh-birá*, the preparation of the paddy-field, and the regulation of water in the terraces are the same in both the subdivisions. Unlike Chutiá Nágpur Proper, the *leh-birá* is more frequent in Palámau than the *matiháni-birá* known here as *bodar-birá*. At the close of the monsoon rains, the paddy-fields, both sown and transplanted, have to be irrigated once, twice, thrice or even oftener according to the urgency of the season and to the supply of water in the *áhrá*.

Harvesting.—The methods of harvesting, of threshing and storing the paddy are the same in both Chutiá Nágpur Proper and Palámau. The harvest wages are always paid in Palámau in kind and consist usually of one bundle of paddy out of every 21 bundles reaped by the labourer. In threshing the corn, the bullocks, usually seven in number, are tied sideways by a rope, one end of which is fastened to a post in the centre of the *khalyán* or threshing yard, as is invariably done in the districts of Bengal Proper. A line of bullocks tied in this manner is called a *dogá*, and frequently more than one *dogá* of bullocks is employed to thresh the paddy.

Yield.—The average produce per acre may be estimated at 12 maunds for the *lahuhan* varieties of paddy, and of 14 maunds for the *ághániyá* varieties which are comparatively heavy croppers. The above figures may be taken to represent a 16-anna crop.

Cost of cultivation.—In the following calculations, the wages of a labourer has been taken to be three *kachchá* seers of grain per diem—the rate at which he is actually paid in Palámau; but harvest wages have been taken as $\frac{1}{21}$st part of the produce. Cash wages may be said to be never paid for cultivation in the Palámau subdivision. The use of plough-bullocks has been charged for as half the wages of the day-labourer, *i.e.*, $1\frac{1}{2}$ *kachchá* seers of grain per diem.

Cost of cultivation of paddy sown broadcast per Palámau bigha.

	Seers of grain.
Four ploughings with harrowings (two ploughs will do 1 bigha in one day ∴ 2 × 4 = 8 ploughs at 6 *kachchá* seers per diem)	48
Seed paddy	48
One weeding (16 men, one day)	48
Repairing *árs* (four men, one day)	12
Watering, regulation of water, &c., (two men)	6
Threshing, cleaning the grain (three men and seven bullocks for two days)	39
Total ...	201
	= $33\frac{1}{2}$ paseris
	= 4 mds. 9 seers.
Add—	
Harvest wages (= $\frac{1}{21}$st of the produce = $\frac{1}{21}$ × 13 *kachchá* maunds = 30 seers roughly)	30 seers
Total cost of cultivation ...	4 mds 39 seers (*kachchá.*)
Produce of grain per bigha	13 mds. (*kachchá*)

Out of the 13 maunds deduct 30 seers as harvest wages; divide balance (= 12 maunds 18 seers) equally between landlord and ráyat ∴ ráyat's share = 6 maunds 9 seers; from this deduct $\frac{1}{12}$th, being cess levied by the *pátwári*— ∴ ráyat's net share = 5 maunds 32 seers. Hence—

	Mds.	Srs.
Ráyat's outlay	4	9
„ income	5	32

Cost of cultivation of transplanted paddy per Palámau bigha.

	Seers of grain.
Five ploughings with harrowings of 4 cottahs of *birá* or nursery ...	12
Spreading of manure	6
Weeding	6
Seed paddy	12
Uprooting and carrying seedlings to field	30
Total cost of seedlings per bigha ...	66

	Seers of grain.
Add to the above—	
Three ploughings of field with harrowings	36
Repairing *árs*	12
Planting seedlings—	
(Sixteen men for planting and one for distributing the bundles of seedlings)	51
Regulating water	6
Threshing and cleaning grain	39
Total ...	210
	= 4 maunds 18 seers.
Add also—	
Harvest wages ($\frac{1}{21}$st of the produce, or roughly)	34 seers.
Total cost of cultivation ..	5 mds. 4 seers.
Produce of grain per bigha	15 mds. (*kachchá*,)

Out of the 15 maunds, deduct 34 seers as harvest wages; divide balance (= 14 maunds 14 seers) equally between landlord and ráyat ∴ ráyat's share = 7 maunds 7 seers; from this deduct $\frac{1}{12}$th, being the share due to the village *patwári* ∴ ráyat's net share=6 maunds 26 seers. Hence—

Ráyats outlay	= 5 mds. 4 seers.
„ income	= 6 mds. 26 seers.

2.—*Gorá* OR *Bhádor* PADDY.

(*Oryza sativa.*)

The cultivation of *gorá* or upland *bhádoi* paddy is quite unknown in most parts of the Palámau subdivision, and is confined to tuppehs Chechári, Baresánd and Seemáh, all adjoining the plateau of Chutiá Nágpur Proper in the south. Its cultivation in these tuppehs differs in no respect from what is followed in Chutiá Nágpur Proper and therefore need not be described over again.

3.—MAIZE (*makái, Zea mays.*)

Maize is the most important among the *bhadoi* crops grown in Palámau. It may be said to be grown more or less by every ráyat, and is the most prominent crop in the hilly parts of the subdivision, where the cultivation of rice and of the *rabi* crops cannot be profitably carried on.

The cultivation of maize in Palámau differs in no respect from that in the Chutiá Nágpur subdivision (*vide* pages 65-67, Part I). There are two varieties of maize grown in Palámau—one with white grains called the *charká*, and the other with yellow grains called the *piár*. These differ only in respect of colour and are equally valued. The average produce of grain per acre is about 6 maunds. For remarks on the improvement of maize cultivation, I beg to refer to what I have already said in treating of this crop in Part I of this report.

(4.—*Máruá*, *Eleusine corocana.*)

For a detailed description of its cultivation, I beg to refer to pages 63-65, Part I.

Máruá is grown everywhere in the Palámau subdivision, and ranks next in importance to maize. The variety grown in Palámau is the early red or *lálká*, ripening in Bhádra and Áswin. The late white variety grown in Chutiá Nágpur Proper is unknown in the Palámau subdivision.

In Palámau *máruá* is always transplanted, excepting in the southern tuppehs where both the systems of broadcasting the seed and of transplanting the seedlings previously raised in a nursery are in vogue as in the adjoining subdivision of Chutiá Nágpur Proper. In Chutiá Nágpur Proper *máruá*, whether sown broadcast or transplanted, is almost invariably manured with ashes and household refuse, leaves, &c.; in the Palámau subdivision, manuring is given only to the seed-bed or nursery, and never to the *máruá* field, as it is found that the application of any manures to *máruá* induces the crop to run to straw, and makes it consequently liable to lodge. *Máruá* is grown as a rule on *bheetá* or outlying village lands; *bári* or homestead lands are usually too rich for the crop, unless they have been previously cropped with *maize* for two or three successive seasons.

The yield of *máruá* averages in Palámau about 8 maunds to the acre, which is somewhat superior to what is obtained in the Chutiá Nágpur sub-division.

5.—*Sawan* (*Panicum frumentaceum.*)

Description.—*Sáwán* is an inferior millet grown in most villages, especially in the hilly parts of the sub-division, where a good deal of fallow *tánr* land is always available for growing millets, *til* and other inferior crops. There is only one variety in cultivation. The grains are very much like those of *gondli* or *menjhree* (*P. miliare*), and are husked like paddy before being eaten.

Rotation.—*Sáwán* is grown either on *bheetá* lands, which are in regular cultivation, or on distant *tánr* lands recently reclaimed from jungle. On the former class of lands, it is made to alternate with other *bhadoi* crops like *máruá* and *barai*, the land usually remaining fallow, and only occasionally cropped with a *rabi* pulse like gram or lentils during the cold weather. On *tánr* lands reclaimed from jungle, gingelly is grown in the first year, and is followed in the second by *sáwán* or *kodo* (*Paspalum scrobiculatum.*)

Cultivation.—After the rains have set in in Ásár, the land is ploughed over three times, and the seed is broadcasted at the rate of about five seers per acre. Neither manuring nor weeding is ever thought of. The crop is ready for the sickle by the middle of Bhádra, the harvest extending to the middle of the next month. Only the ears are cut off, the stubble being left in the field to be eaten off by the village herd. The ears are threshed by cattle in the same way as paddy. *Sáwán* stubble is often buried in by ploughing, and being easily decomposed acts as a valuable manure for the succeeding crop which is usually grain.

The produce of grain averages four maunds to the acre, valued ordinarily at Rs. 2-8.

6.—*Kodo* (*Paspalum scrobiculatum*).

Description.—*Kodo* is a very inferior millet grown mostly in the hilly parts of the sub-division. It is husked in the same way as paddy, *gondli* and *sáwán*, and eaten in the form of *bhát* or boiled grains.

Rotation.—*Kodo* is grown in *tánr* lands, and with *sáwán* forms a distinct link in the rotation of fallow and reclaimed jungle lands (*vide* page 25, Part II).

Cultivation.—The cultivation of *kodo* is slightly more careful than that of *sáwán* and *gondli*. After the preceding crop of gingelly has been off the ground, and sufficient rain has fallen in Mágh, the land is ploughed up twice, and left to weather till the commencement of the rains. In the beginning of Ásár the land is ploughed two times over, and the weeds picked off by the hand. The seed is then sown broadcast at the rate of 20 seers per acre, and is buried in by a light ploughing, and the land levelled by the harrow. In Bhádra and Áswin, if the crop is found badly infested with weeds, these are picked off. Nothing else is needed until the crop is ready for the harvest in Áughrán. The crop is reaped and threshed in the same manner as paddy.

The produce of grain averages six maunds to the acre, ordinarily valued at Rs. 3-12. The straw is of coarse quality and is not relished by cattle. When fodder becomes very scarce during the dry season, they take to it for want of better food.

Rahar (*Cajanus indicus*) is very often grown as an auxiliary crop with *kodo*. About five seers of seed is broadcasted along with the *kodo*. This will turn out on the average about four maunds of pulse per acre, valued at Rs. 3-12.

7. *Menjhree* (*Panicum Miliare.*)

Menjhree is a small variety of *gondli*, which is grown to a small extent by poor ráyats, mostly those inhabiting the hilly tracts of the sub-division, such as the Korewárs, Páháreyás, Kols, &c. It is made to follow gingelly in the third year on *dáhá* land, and occupies the same place in the three years' *tánr* rotation as *kodo* and *sáwán*.

Although resembling *gondli* in most respects, it differs specifically from the latter in having short straight ears unlike the diffuse drooping ears of *gondli*. The period of its cultivation is also different from that of *gondli*. It is sown

in Áswin and reaped in Áughrán, being thus included in the category of *kharif* crops, while *gondli* is a *bhadoi* crop sown at the commencement of the rains and reaped at their close.

The cultivation of *menjhree* is very simple, and requires seldom more than three ploughings. The seed is scattered broadcast at the rate of *five* seers to the acre. Nothing else is needed before harvesting which takes place in about 10 to 11 weeks after the sowing. The outturn is very poor, seldom exceeding four maunds per acre. It is grown by ráyats for home consumption, and is not as a rule brought to the market.

8. Wheat (*Goham*, *Triticum sativum*).

Extent of cultivation.—Wheat is cultivated more or less in all parts of the Palámau sub-division, excepting in the hilly tracts where the soil is too gravelly and loose to admit of its cultivation. Its cultivation may be said to increase in proportion to that of paddy. The alluvial valleys of the Koel and the Ámánat comprised in the Police Circles of Daltonganj, Gárwá, and Paton, and the narrow strip of flat country fringing the sub-division in the north and between Hariharganj on the east and Sonpurá on the west, are the chief centres of wheat cultivation.

Varieties.—There are three varieties of wheat in cultivation in Palámau, viz. (1) *ujlá* or *dáudiá* (literally *of a milky colour*), a soft white wheat; (2) *dhusar* or brown wheat, intermediate in colour and quality between the *ujlá* and the third variety; and (3) *lálká* or red hard wheat. The white wheat has smaller but finer grains than the red wheat; it is easier to grind, yields a superior quality of flour which is the best for making bread. On the other hand, the red wheat, although inferior in quality, is much more prolific than either of the other two, has a hardier constitution, and admits of being kept in store for a longer time than the soft varieties of wheat. The red and the brown varieties are equally valued in the market; white wheat sells usually about a couple of seers less for the rupee than the others.

Soils suited for wheat cultivation.—Wheat is found to do best on *kewál* or strong clayey soils, and sufficiently well on loams and alluvial deposits. On lighter soils the ear becomes weakly and shrivelled and the grains do not develop.

Rotation.—Wheat is, as a rule, grown on *bheetá* lands, and occasionally on *bári* lands which support a clayey soil. On *bheetá* it may be grown on the same land for two or three successive seasons, after which it is found advisable to crop it with some leguminous crop for a year or two, (*vide* page 25). On *bári* land it usually follows maize or *máruá* in the same year.

Wheat is either grown as a single crop, or as a mixed crop with gram or lentils. The practice of sowing mixtures is not, however, so general as in Behar. Occasionally a wheat field is fringed on the sides with linseed.

Cultivation.—The land is opened by two ploughings in Ásár, if the ráyat can spare any time for the work, and thus kept free of weeds and exposed to rain and the sun. But most ráyats are at this time too busy with paddy cultivation to bestow much thought and labour on their wheat-fields which are consequently left fallow till the close of the rainy season.

If the land has not been broken up in Ásár, (June—July) the first ploughings are given in the latter half of September. In either case the ploughings are continued at intervals of a week or so until the land is reduced to a sufficiently fine tilth to receive the seed. When the soil has become sufficiently dry on exposure, the plough is closely followed by the *hengá* or harrow. The total number of ploughings varies usually from 8 to 10.

When the soil has been well pulverised and levelled by the last harrowing, the seed is drilled in furrows by the *táriá* or drilling plough. For a description of the drilling plough, *vide* page 20, Part II. The *táriá* goes round and round the field in gradually narrowing circles, and finishes at the centre. A plough-breadth of land is allowed between two contiguous lines of seed. The quantity of seed-wheat sown per bigha is a little variable, rich soil requiring less seed than comparatively poor ones. On the average 36 seers of grain may suffice for sowing one acre of land. The season for sowing wheat extends over the whole of the month of Kártic and the early part of Áughrán. *Doob* lands or those forming the beds of *áhrás* take longer time in drying and are the latest to be sown.

After the seed has been drilled in, the crop requires no further treatment before it is harvested. Wheat-fields are neither manured nor weeded. Irrigation of wheat is also all but unknown in Palámau, and it is only here and there that a few ráyats are fortunate enough to be able to command the use of a village well for this purpose. The people know fully well that by means of suitable manuring and irrigation, the outturn of wheat may be easily doubled, and the precarious nature of this as well as other *rabi* crops, depending as they do entirely on the chances of rainfall, safely guarded against. But unfortunately both these measures are under their present circumstances quite beyond their means.

Harvesting.—The wheat harvest commences in the latter part of Fálgun and extends over the whole of Cheyt, and in rare cases to the early days of Byśák. The crop is cut when perfectly ripe and the straw has become quite dry and crisp. The crop is reaped by the sickle at about six inches above the ground. It is made up into loads which are carried on the same day to the threshing floor. It is spread out on the floor for a day or two to get fully dried up, when it is threshed in the same way as paddy. The bullocks, usually 14 in number, and tied breast to breast to two rows, are made to tread the mass for two or more days in succession until the straw which has become crisp and friable by thorough exposure and dryage is reduced into small bits, rather soft to the touch, not unlike the condition of chopped straw. The straw thus reduced is known as *bhusá* and is deemed an excellent food for cattle.

The grain is subsequently winnowed with the basket in the same way as paddy.

Storing.—There are four different ways of storing wheat, and in fact all other valuable grains. These are—

(1) In *morás* as in Chutiá Nágpur Proper, for a description of which *vide* page 60, Part I. Storing grain in the *morá* is considered the best safeguard aginst weevils.

(2) In *delis* or bamboo baskets, *vide* page 60, Part I. Although the top and the inside of the basket is plastered over with a mixture of cowdung and mud, grains are found to be liable to ravage by weevils and whiteants.

(3) In *pits* or *kothis* as is the common practice all over Behar and the North-Western Provinces. This is the most economical way of storing large quantities of grain. The pits, if well made, are fairly proof to weevils and other insect pests.

(4) In earthen vessels of which the mouths are covered up with a coating of clay. Only small quantities of grain admit of being stored in this manner.

Diseases and injuries.—The prevailing diseases of wheat are—

(1) *Rust.*—In Palámau two forms of rust are distinguished—one of a yellow colour called the *jardá*, and the other brown known as the *gerui*. The character of this fungoid disease is too well-known to need any description here. The disease is favoured by prolonged wet or cloudy weather. Late sown wheat is found to be more subject to its attack. Blades of wheat affected with rust become shrivelled in appearance, and the ears weak and short. The loss caused by rust is never either heavy or general.

(2) *Smut.*—This is also a well-known fungoid disease. The ear of the corn becomes covered over with a black powdery substance. Smut has never been known in Bengal to cause much injury, although in most fields a few ears are found to be infected with it.

(3) *Kátui.*—A species of caterpillar, most likely a cut-worm, which eats away the plants only while yet very young and tender. Hot and rainless weather is a precursor of this pest.

None of these pests has ever been known to cause more than a very limited amount of injury to wheat. Its chief enemy may be said to be the hailstorm if it happens, as it is liable to do, about the time when the crop is ready to be harvested. Hailstorms have been known to sweep over a stretch of country to the great loss of all cold-weather crops; but fortunately the area covered by a hailstorm is always more or less circumscribed.

Yield and cost of cultivation.—The yield of wheat averages in Palámau about 10 *kachchá* maunds per local bigha, or about 9 maunds per acre, valued in ordinary times at Rs. 2 to Rs. 2-4 per maund. On good clay soils the cultivation of wheat is found to be very remunerative, as the following calculations of its cost and outturn will clearly show. For the purposes of these calculations, the local standards of land and grain measure have been taken for the sake of convenience; and the wages of a labourer reckoned at the rate of 6 pice per diem (*vide* page 15), and the hire of a pair of oxen at the same rate as the wages of one labourer.

Cost of cultivation of wheat per local bigha.

	Rs.	A.	P.
Eight ploughings with harrowings (three ploughs can plough one local bigha in 1 day: 24 ploughs=24 men and 24 pairs of bullocks, at 6 pice each)	4	8	0
Seed-grain one local maund=27 seers (pákká) at Re. 1-8 ...	1	8	0
Reaping corn and carrying it to threshing floor (10 men at 6 pice each)	0	15	0
Threshing and cleaning grain (four men and seven pairs of oxen for two days=11 men for two days at 6 pice per diem)	1	0	6
Rent of 1 bigha	2	0	0
Total cost ...	9	15	6
Produce 10 maunds (local) at Re. 1-8	15	0	0

The above figures reduced to standard measures show:—

Cost of cultivation per acre	13	4	8
Produce 9 maunds per acre at Rs. 2-3-6 per maund ...	20	0	0

On the *bátwárá* system of dividing the produce between landlord and ráyat, the outlay of the latter would be Rs. 9-15-6 *minus* the cost of reaping (Re. 0-15-0), threshing (Re. 1-0-6) and rent (Rs. 2), that is=Rs. 6. His income of grain would be Rs. 7-8 *minus* $\frac{1}{12}$th of it being the *patwári's* share, that is Rs. 6-14.

9. Barley (*Java, Hordeum vulgare*).

Description.—There is only one variety of barley in cultivation. It is six-rowed and belongs to the sub-species *H. hexastichum*. Barley is a much hardier crop than wheat and thrives on apparently poor and gravelly soils. It is grown everywhere in Palámau, except in the hilly tracts inhabited by the aboriginal tribes, who show little aptitude for the cultivation of food-crops other than their favourite millets. Barley is essentially the poor man's crop, and is eaten in either of the following shapes—(1) as *roti*, or baked cakes of flour; (2) as *bhát*, or boiled grains; (3) as *phárui*, or fried grains; or (4) as *sátu*. The last form of preparing the grain for food is the most favourite; it is made by first parching the grains over a fire, and then grinding them into a coarse flour. *Sátu* is usually partaken of as a mid-day meal by the labouring classes, and seasoned with a little salt and a chilly.

Soils suited for barley cultivation.—Barley thrives best on deep loamy soils and on alluvial deposits. Strong clay soils are suited to wheat, but not to barley.

Barley as a rule is grown on *bheetá* lands; *chátar* or high-lying paddy terraces cropped with the earlier varieties of paddy are also occasionally thrown under barley. It is also found here and there to be grown or *bári* lands that bear a lighter discription of soil and are so unsuited to the cultivation of wheat.

Cultivation.—The cultivation of barley differs in no respect from that of wheat. Early ploughings at the commencement of the rains as are occasionally given to wheat are never thought of for barley. There is also no difference between wheat and barley in respect of the manner of their harvesting and threshing. Barley is subject to the same diseases and injuries, but only to a lesser extent, as wheat.

Yield and cost of cultivation.—The yield of barley varies from 10 to 25 local maunds per bigha in a year of well-distributed rainfall. Fourteen maunds may be estimated as the average produce. This gives roughly 13 *pákká* maunds of grain to the acre, valued in ordinary times at Re. 1-4 per maund; in all

Rs. 16-4. The cost of cultivation would be nearly the same as that for wheat, viz., Rs. 91-5-6 per local bigha, or Rs. 13-4-8 per acre.

10.—*Chine* (*Panicum miliaceum*).

Description.—*Chine* is a finer description of millet requiring much care for its cultivation. The husked grains which very much resemble those of *gondli* are boiled into *bhát* and eaten as such. There is only one variety of it in cultivation.

Cultivation.—*Chine* is grown on *bheetá* lands, and occasionally in high-lying paddy terraces. In any case such lands must be favoured with facilities of irrigation. Like *boro* paddy, it is grown during the hottest months of the year when the ráyat has very little work in hand. The ráyats try to make up the deficiency of a paddy harvest by throwing all available lands under this crop, and for this reason its cultivation may be said to fluctuate to a certain extent according to the condition of the preceding *kharif* crop. But under the present circumstances, its cultivation would be very limited for want of facilities of irrigation.

In Mágh after the paddy has heen harvested off the paddy terrace, or some other cold-weather crop has been removed from the *bheetá* field, the land is ploughed three or four times over, harrowed and levelled. For convenience of irrigation, the field is occasionally dressed into little terraces about five feet square closed on all sides by low ridges. These terraces are interwoven with shallow parallel channels of irrigation.

Before sowing the field receives a light watering; the seed is then broadcasted on the loose moist soil at the rate of about five seers to the acre and buried by the harrow. The sowing time extends over the two months of Mágh and Fálgun. Irrigation is continued at intervals of seven to ten days according to the dryness of the soil. As the crop approaches maturity, the waterings must be more frequent, being repeated twice a week in order that the grains may fully devlop and mature.

The crop occupies the ground for about three months. It is reaped and threshed in the same way as paddy.

The produce averages about eight local maunds per local bigha, or about seven maunds per acre.

II.—Pulses.

1.—*Urid* (*Phaseolus roxburghii*).

Varieties.—There are three varieties of *urid* cultivated in Palámau, viz., (1) the *bhadoi* variety, sown in Ásár and reaped in Bhádra, having grains of a deep black colour; (2) the *kártickeya* sown in Ásár and reaped in Kártic, having grains of a greenish colour; and (3, the *kharif* variety sown in Bhádra and reaped in Áughrán, having grains of a lighter colour than either of the above two. The *bhadoi* and the *kharif* varieties appear to be the same as those noticed under Chutiá Nágpur Proper. In point of taste and market-price, there is no appreciable difference between these variations.

Soil and rotation.—*Urid* is grown either on *tánr* or on *bheetá*. On *tánr* lands it may follow gingelly in the next year, or may be sown with cotton in *dáhá* lands. The *kartickeya* variety is the one grown with cotton. On *bheetá* lands there is no fixed system of rotation as has been explained in the section on rotation (page 25, Part II).

Cultivation.—In Palámau the cultivation of *urid* calls for much less care than in Chutiá Nágpur Proper. The crop is never manured or weeded. With these exceptions the cultivation is the same in both the sub-divisions. The same caterpillar as is reported from Chutiá Nágpur Proper causes great injury to the young crop by eating away the leaves.

The produce of pulse per acre may be estimated at three maunds, valued at Rs. 5.

2. *Barai* (*P. mungo*).

There is only one variety of barai cultivated in Palámau. For a description of its cultivation, I beg to refer to page 68, Part I.

3. *Kurthi* (*Dolichos biflorus*).

Its cultivation is the same in Palámau as in Chutiá Nágpur Proper (*vide* page 67, Part I).

4. *Rahar* (*Cajanus indicus*).

The varieties of *rahar* and its cultivation are exactly the same in both the sub-divisions of Lohárdagá. For a detailed description of these, (*vide* pages 69-70, Part I).

In Palámau, *rahar* is always grown as an auxiliary crop with either of the following:—*Kodo*, *gondli*, *sáwán*, *barai*, *urid*, and occasionally with *máruá*.

The produce may be estimated to average five maunds to the acre, valued at Rs. 9 in a year of ordinary prices.

5. Gram (*but*, *Cicer arietenum*).

Variety.—There is only one variety of gram in cultivation.

Soils and rotation.—Gram and lentils occupy more than half of the *bheetá* lands cropped with *rabi* crops. Wheat, barley, linseed and peas occupy the remainder. There is no fixed system of rotation followed in the cultivation of *rabi* lands; only corn and pulse crops are made to alternate with each other at intervals of two or three years.

In Palámau, gram is mostly grown by itself, and only now and again as a mixed crop with wheat. Its cultivation differs in this respect from the practice of sowing mixtures in vogue in the adjoining districts of Behar.

Cultivation.—As soon as the rainy season has fairly closed, about the latter half of September, the land is broken open by the plough and allowed to weather for a few days. In October it is ploughed over twice again, harrowed and levelled. If the soil is sufficiently moist, the seed is sown broadcast: if too dry, it is drilled by the *tária* in the same way as wheat and barley, with a view to bury the grains deeper in the soil and keep them moist. The quantity of seed required per acre varies from 27 to 36 seers per acre, more being required for broadcasting than for drilling. The sowing season extends over the entire month of Kártic, and may be continued to the first week of Áughrán.

Nothing else requires to be done before the harvest takes place in Cheyt. The whole plants are plucked by the hand, made up into loads and carried to the threshing floor. The grains are threshed and cleaned in the same way as paddy. The straw and the husks of the pods form an excellent fodder for all manner of live-stock.

Yield.—The produce of gram averages about eight maunds per acre, valued at Rs. 12 in a year of average prices.

Diseases.—Gram is subject to injury by two pests—(1) a small caterpillar called the *ghángri*, which eats into the gram when nearly ripe, and (2) a fungoid disease (which I take to be akin to clover disease), which causes the plants to die off in patches about the flowering time. This complaint is said to be common to all *rabi* crops, and occurs only in fields which have been cropped with *rabi* crops for eight or ten successive years. When a field is found to be suffering from this disease it is allowed to lie fallow during the cold weather for a year or two; some *bhadoi* crop like *urid* or *barai* may be taken off the field in the meantime.

6. Lentils (*masuri*, *Ervum lens*).

Only the smaller variety of lentils is grown in the Palámau sub-division. Its cultivation is in every respect the same as that of gram. The quantity of seed required per acre is about one-fifth less than what is required for gram. The produce per acre is about 8 maunds, valued at Rs. 12.

7. *Khesári* (*Lathyrus sativus*).

Khesári is a species of vetch which yields a coarse kind of pulse. It is very easily raised, being sown immediately after the close of the rainy season among the standing paddy. Only rich clay fields which retain sufficient moisture during the cold weather are adapted to this crop. The seed is sown broadcast at the rate of about 25 seers per acre. The seed grains are occasionally prepared for sowing by rubbing over with green *gongrá* leaves (*Luffa acutangula*)

which are said to have the power of quickening germination. The harvest takes place in Cheyt. The produce of pulse varies from 5 to 10 maunds per acre. *Khesári* is a cheap pulse, and sells in a year of ordinary prices at nearly 1½ maunds for the rupee. It is eaten either in the shape of *dái* or soup along with boiled rice or *roti*, or of *sátu* in the same way as barley, gram, urid, and several other pulses.

The straw is reduced in threshing to *bhusá* or chaff and given to cattle.

III.—Oilseeds.

1. Linseed (*tisi*, *Linum usitatissimum*).

There is only one variety of linseed in cultivation. The cultivation of land for linseed is the same as for gram, lentils, &c. It is either sown singly or as a fringe around wheat and barley fields. The quantity of seed sown is about 8 seers to the acre.

The crop is harvested in Cheyt and threshed by cattle in the same way as other *rabi* crops. The produce averages about 5 maunds per acre, valued in a year of good harvest at 20 to 24 seers for the rupee.

The straw is reduced to *bhusá* and given to cattle in mixtures with the *bhusá* of wheat, barley, gram, lentils, &c. It is considered as heating, and therefore seldom given to animals by itself. This is said to be especially the case when there has been no rain in Mágh and Fálgun. Rain in these months is believed to wash off the heating properties of the straw.

Linseed is not subject to any diseases, but the crop, especially if late sown, is occasionally found to be barren of seeds. Entire fields of linseed with the exception of a few seeded plants here and there may be lost in this manner.

2. Gingelly (*til*, *Sesamum indicum*).

Varieties.—There are two varieties of gingelly in cultivation—one white and the other black. The black variety is the more prolific than the white, but the latter is more valuable, being prized for making sweetmeat.

Rotation.—Gingelly or *til* forms a distinct link in the rotation of *tánr* lands in Palámau. On *dáhi* lands it follows cotton in the second year, and on fallow *tánr* it is taken in the first year; in either case it is followed by *kodo and sáwán* (*vide* page 25, Part II).

Cultivation.—About the latter part of Ásár or the beginning of Srávan the land is ploughed over twice and the seed broadcasted on the furrows at the rate of 5 seers per acre and harrowed in the sowing season which extends over the entire month of Srávan. The crop is reaped while yet slightly green in Áughrán being cut at the base. The stalks are carried to the threshing floor and allowed to ferment in oblong stacks for a few days. The capsules naturally burst open and let out the seeds which are shaken off and gathered.

A species of spiny caterpillar is very often found to infest the crop about its flowering time.

The produce of oilseed averages three maunds per acre, valued at about 16 seers for the rupee.

IV.—FIBRE CROPS.

1.—Cotton (*kápás*, *Gossypium herbaceum*).

Extent of cultivation.—Cotton is the favourite crop of the semi-aboriginal tribes of Palámau—the Cheros, Kherwárs, Bhuiyás, Páháriyás, &c. The *dáhi* system of cultivation in vogue entails considerable hardship upon the cultivator; hence none of the pure Aryan castes who follow a comparatively higher standard of life care to cultivate cotton.

The chief seats of cotton cultivation are the hilly and jungle tracts inhabited by the tribes: in the open valleys of the larger rivers, the amount of jungle and fallow land suited to cotton cultivation is limited, and in many parts absolutely *nil*. The cultivation of cotton, *til*, *kodo* and *sáwán* which are grown on old fallow and jungle clearings has been decreasing in Palámau with the rapid extension of cultivation. In many villages I have seen cotton cultivation entirely given up within recent years, there being no jungle in the neighbourhood available for burning. Mr. L. R. Forbes, for a long time Assistant Commissioner of Palámau, estimated the area under cotton in Palámau at 9,600 acres.

Variety.—There is only one variety of cotton cultivated in Palámau. It is the true type of the indigenous Indian cotton: the capsules are much smaller and the staple shorter than those of the *barhiyá* variety of cotton noticed in Part I (page 71) as being grown in the Five parganás.

Rotation and soils.—Cotton is grown, as has been said above, on old fallow *tánr* or new jungle clearings. It is the first crop in the three years' rotation of *tánr* lands followed in Palámau (*vide* page 25, Part II). Black clayey soils (*kewál*) are the best suited to cotton; these soils are believed to resemble the famous black cotton soils of Central India. On the lighter descriptions of soils, the plants quickly wither up and are never found to thrive well.

Systems of cultivation.—There are two systems of cotton cultivation, viz., (1) *káchwá* (literally *uncooked* as distinguished from the second system in which the land is burnt), rarely followed in Palámau, but largely in vogue in Chutiá Nágpur Proper, and (2) *dáhá* or *dáhi* (literally *burnt*) which consists in burning a thick layer of wood over the land as a preliminary operation of its cultivation. The *dáhá* system is the rule in Palámau and is described in the following paragraphs.

Dáhá cultivation.—The land selected for the cultivation is either new forest land or old fallow overrun with a new growth of bush jungle. In January and February the standing jungle is cut down and allowed to dry. On fallow land the quantity of jungle thus cut down is never sufficient, and so the cultivator cuts down as many trees as he may want for the purpose in a neighbouring forest. These are left to dry till April and May, when they are cut into convenient logs and conveyed by a pair of bullocks to the *dáhá* land. Large and valuable trees are thus ruthlessly cut down to the great injury of forests. The stumps are left in the ground and push out new shoots which have barely time to attain to the size of trees before they are again requisitioned for the *dáhá*. A large portion of the surface of the Palámau sub-division has thus been denuded of forest, although it remains yet covered with a thin scrub jungle which produces little or no timber.

The dry logs of wood are evenly spread over the land and a windy day is selected for setting fire to the mass. The fire is set to in a line on the windward side of the land. A number of men provide themselves with long bamboos fitted into their ends with logs of wood and standing before the fire push on the glowing ashes in a gradually advancing line, until the whole mass has been burnt down to ashes.

The benefits claimed for the *dáhá* cultivation are the following:—(1) It burns out and thus destroys the roots and seeds of all grasses and other weeds, and thereby saves considerable labour in weeding the crop; (2) it serves to manure the soil with ashes. This second advantage is only apparent, as the whole of the ashes is blown off the field by strong west winds which prevail about this time, unless a shower of rain has fallen immediately after the *dáhá* is performed. The *dáhá* resembles the practice of burning clay soils which is followed to a certain extent in the clay districts of England, and the advantages claimed for the English practice, that it sets free a portion of the potashes and other alkalies in the soil, may be also secured by the *dáhá*.

Subsequent preparation.—The cotton land thus prepared by the *dáhá* is left without further treatment until the rainy season has set in. In *Árdrá*, corresponding to the first fortnight of Ásár, the land is lightly ploughed over once before sowing, rarely twice; the ploughing is not considered essential, and many ráyats do not think it worth their while to plough their cotton land at all, but sow the seed on the bare ground.

The sowing season is covered by the *Árdrá*, and occasionally extends to the early part of the next astral—*Rohini*. Rain is considered essential to cotton during the *Árdrá*, and the proverb (*Árdrá tábe, tinme moo-e*) says that if rain fails in *Árdrá*, three crops are lost, viz., cotton, sunn hemp, and *sáti* paddy. The sowing is best done in drizzling rain. The seed is sown either as it is, or pickled with cowdung in order to keep the grains separate. About 12 seers of seed are required per acre.

After the field has been sown, the next care of the cultivator is to fence it round to keep off the deer, which are very fond of eating the green leaves of cotton. The field may be weeded once in Bhádra, but weeding is indeed very seldom required. The crop when ripe has to be watched day and night against thieves.

Harvesting.—The picking of cotton begins in the latter part of Kártic, and is continued all over the next month of Áughrán. It is usually picked in two instalments; sometimes all at once. Rain at any time during the harvest is extremely injurious, as it spoils the cotton lying open in the burst capsules.

The average produce of seed-cotton may be estimated at 2¼ maunds per acre. This quantity will usually yield about one-third its weight of cleaned cotton. The proportion of cleaned cotton to seed-cotton varies from 1: 3 to 2: 7 according to the richness of the crop.

Cost of cultivation.—It is very difficult to make a correct estimate of the cost of cultivation of cotton, and indeed of most farm crops in India. I have several estimates before me based on information collected from competent ráyats. The following one appears to me to be the most reliable of these:—

	Rs.	A.	P.
Cutting down wood (26 men for one day)	2	7	0
Carrying wood to the field and spreading (one man for 16 days)	1	8	0
Firing wood (six men for one day)	0	9	0
One ploughing (six ploughs for one day, at 3 annas each) ..	1	2	0
Seed, 12 seers	0	8	0
Weeding (26 men for one day)	2	7	0
Fencing (seven men for one day)	0	11	0
Watching the crop (one man for two months at half wages, as he can do other work while watching) say ...	3	0	0
Picking cotton (14 men for one day)	1	5	0
Rent	0	12	0
Total ...	14	0	0

Average produce= 90 seers of seed-cotton (at 12 local seers=6¾ seers for the rupee): value=Rs. 13-5-3.

The cost of cultivation is mainly decided by the expense involved in cutting down the wood and carrying it to the field. This element of cost is very variable, depending as it does on the distance from which the wood has to be carried. If there is plenty of wood on the land itself or in its immediate neighbourhood, the cost of cultivation may be materially lessened.

Cotton seeds, after the fibre has been separated by ginning, are valued for feeding cattle. *Bepáris* and cartmen largely use this article for feeding their animals, but the ráyats make little use of them. The produce of seeds per acre (about 60 seers) may sell for Re. 1.

VI.—MISCELLANEOUS CROPS.

1.—Sugarcane—(*ketári, Saccharatum officinarum*).

Extent of cultivation.—Sugarcane is cultivated to a small extent in the alluvial plains which intervene among the hills in the north and centre of the Palámau sub-division. The southern limit of its cultivation lies about 12 miles south of Daltonganj in tuppeh Bári. In the country about Hariharganj in the extreme north-east corner of the sub-division, it is grown in most villages

Varieties.—Five distinct varieties of sugarcane are in cultivation in Palámau. These are—

(1) *Ketár*, a thin but very tall variety grown in the central tuppehs of Palámau: itcorresponds to the *bánsá* cane of the Five Parganás.

(2) *Manigo*, a thin and very short cane 4 or 5 feet high, commonly grown in Deogán in the north-east of the sub-division. This variety is extensively grown all over south Behar and is valued for the large proportion of sugar to juice which it yields.

(3) *Newár*, resembling the *manigo*, but a little thicker; *newár* cane yields a large quantity of sugar area for area than *manigo*, but the *gur* has a saltish taste and is less valued.

(4) *Básin*, yielding a very bright coloured *gur*, but an inferior yield.

(5) *Bhunrli*, allied to the *newár*, but with shorter joints, yielding a bright coloured *gur*.

The first two varieties are commonly grown in Palámau; the other three are but little known. The *ketár* is an early variety, being reaped in Pous

and early Mágh; the other varieties are late, and their harvest does not take place before Fálgun and is continued to the first fortnight of Cheyt.

Rotation.—The usual rotation of sugarcane lands is the following:—

1st year	...	... Sugarcane.
2nd „	...	... A *bhadoi* crop only and cold-weather fallow.
3rd „	...	... Fallow.

The rotation is one of three years, the third year's fallow being again followed by sugarcane in the fourth year. The *bhadoi* crops taken in the second year may be *sáwán*, *máruá*, *kodo or gondli*; if the land is sufficiently low and moist, the *sáti* variety of early paddy may be taken in place of the millets. Commonly *sáwán* and *rahar* are made to follow sugarcane, as the stubble of the former (*sáwán*) is believed to enrich the soil for the benefit of the succeeding crop.

Soil.—In Palámau, sugarcane is preferably grown on *pá-ur*, *i.e.*, light loamy soils. It will do just as well, and even better, on clay soils; but the produce is said to be of inferior quality. In the Five Parganás, on the other hand, clay soils are held best for sugarcane, both in respect of the yield and colour of the *gur*. Among the five varieties of cane noticed above, the *newár* thrives best on clay soils.

Manuring.—Ashes produced by burning cakes of cowdung, and every other description of wood ashes, are used for manuring sugarcane. Sheep dung obtained by folding a flock in the field for a night or two is also frequently used. Unburnt cowdung is never used, as it is believed to stimulate the growth of the canes, which thus become liable to fall down; cowdung also produces a larger quantity of cane-juice, which is, however, much less sweet in consequence. The objection to the use of raw cowdung on the score of its encouraging the attacks of white-ants is not raised in Palámau. The manures are applied to the field some time before the planting takes place, and get mixed up with the soil by the ploughings which follow.

Cultivation.—The ploughings commence in Ásár, and are continued at intervals till Kártic. The frequency of ploughings during the rainy season depends a great deal on the leisure of the cultivator, whose hands remain more or less full of various other work during this time. During the three following months of Áughrán, Pous, and Mágh, the field is repeatedly ploughed and cross ploughed, as many as 15 ploughings being often given during this period. Towards the end, frequent harrowings are also given in order to pulverize the soil and produce a fine tilth on the surface. If the weather before the planting takes place has been particularly dry, and in consequence large clods have been formed in the field, the latter is irrigated, harrowed, levelled and pressed by the *hengá*.

When the field has been thus prepared and levelled, the planting is done in the following manner. One plough goes in front of a second in the same furrow, which is thus made deeper. A man follows the ploughs with cane cuttings which he lays flat over the bed of the furrows, allowing a span breadth of ground between every two cuttings. He is immediately followed by a third plough, which makes a furrow a little on one side, and covers up the cuttings in the preceding furrow with a layer of soil about six inches deep. For the convenience of planting, the field is divided into several parcels, which are planted one after another. The three ploughs go round and round the parcel of land, the space allowed between two contiguous lines of cuttings being about 9 inches. After the entire field or a defined portion of it has been planted out it is smoothed and pressed by the *hengá* or *chowk* passing over it.

Twelve thousand cuttings (*ponhrás*) are estimated to be required for planting one local bigha (roughly ¾ths of an acre) of land. The tops of the canes of the preceding crop are cut into convenient lengths, each piece retaining 2 or 3, joints. For seed-cuttings of the shorter varieties of cane like the *manigo*, the entire canes are cut into pieces for the purpose, and the tops left off.

On the fourth day after the cuttings have been planted, the upper two inches of soil are loosened by the *pháurá* or spade, and the loosened soil levelled and pressed by the *chowk*. Both these operations are repeated a second time on the 12th day.

In three weeks' time the shoots appear above the ground. The first watering is given about a week later on. Seven men working for 12 hours are

required to irrigate 1 bigha of sugarcane in a day. Four of these men work at 4 *láthás*, and are relieved by turns by two others; the seventh man guides the course of the water in the field. For the purpose of irrigation, the field is mapped out into small squares which are enclosed by low ridges; these squares are called *gánreris*. After one square has been flooded, the water is led into another, and so on, till the entire field is irrigated. Three or four days after the irrigation, when the surface soil has become sufficiently dry, it is loosened by a small spade or hoe called the *phâuri*, and then levelled by the feet. The watering followed duly by the hoeing and levelling is repeated once and sometimes twice at intervals of a month. Three waterings are usually required—the first in Cheyt, the second in Bysák, and the third in Jeyt—but the number of waterings may be diminished by a seasonable fall of rain during these months. At the time of hoeing the crop in Bysák and Jeyt, the roots of the canes are earthed up and thus encouraged to tiller.

During the rainy season, the intervals between the plants have to be dug over twice—once in Ásár and a second time in Srávan—in order to loosen the soil and to remove all grasses and weeds that may have sprung up with the advent of the rains.

Previous to planting, the sugarcane field is enclosed on all sides by trenches; and these latter are planted over with the thorny branches of *baer* which serve as a rough sort of fence against pigs, bears, and jackals.

Harvest and manufacture of concrete (*our*).—The harvest of sugarcane commences in the last week of Pous, and is continued to the second week of Cheyt. The canes are cut down by the spade, and are then stripped of their leaves. The tops are also cut off to furnish cutttings for the next crop of sugarcane.

The cleaned canes are brought to the *kolsár* or gur-making yard. It is a small plot of ground close to the cane-field, and sheltered by trees, and has a small temporary thatch in one corner to serve as a store for the produce and shelter for the gur-makers.

In one part of the *kolsár*, a temporary furnace or *chulhá* is made, and in another the mill is set up for grinding the canes. The furnace is of circular shape, 4 feet across, about 3 or 4 feet deep. It is enclosed by a mudwall raised a cubit high above the ground. On one side of the *chulhá* is a large hole through which the fuel is fed; and on the opposite side is a long gallery which leads away the smoke from the furnace and thus serves as the flue. About half-way between the top and the bottom of the furnace is a shelf made of twigs plastered thickly over with mud; on this the fuel is placed while burning, and the ashes as they accumulate are pushed down by a long rake into the hollow of the *chulhá*.

Grinding.—The only machine for pressing sugarcane in Palámau is the Behea mill, which has completely driven the native *kalhu* out of use. The mill is driven either by a single bullock or by a pair. The manufacture of *gur* usually goes on by day and night. To keep one machine going for 24 hours, 8 to 12 country bullocks are required, each pair being relieved by another in regular rotation. One mill is estimated to press 32 *kundás* or earthen pots of juice in 24 hours, and the bullocks are changed at intervals of 2 *kundás* of juice.

The shallow iron boiling pan is in use in Palámau. Deep earthen pots for boiling the cane-juice, which are used in the Five Parganás and in Bengal Proper are quite unknown in Palámau as they are in south Behar. The pan is 4 to 5 inches across and about 4 inches deep in the centre. It is capable of boiling 2 maunds of juice at one time. For a single furnace there are usually two boiling pans, particularly when *cháki gur* is to be made. For making this description of *gur*, it is necessary to stir it with a wooden rake for a length of time after the pan has been taken down from the *chulhá*: in the meantime the boiling of fresh juice may go on uninterrupted in the second pan. When *ráb* is made, no such stirring is necessary, and the boiling may go on without any interruption, fresh juice being poured into the pan immediately after the preceding charge of *gur* has been ladled off.

Cane-leaves and megass, that is, the refuse of the canes after pressing, are the only fuel used in boiling the juice.

The actual process of boiling the juice to *gur* is as follows:—The pan is set over the fire, and 4 *kundás* (roughly 2 maunds) of juice poured into the pan. The juice is seldom strained to remove chips of cane and other mechanical impurities. These are very probably retained on purpose in the juice in order to add to the weight of the outturn. After a short time the

scum comes up and begins to accumulate on the sides of the pan. When sufficiently thick, it is skimmed off with an iron handle. The use of milk, lime-water, or any mucilaginous substance like castor seed emulsion, or the juice of *dheras* bark (*Hibiscus esculentus*) is either not understood or not known. The fact is that there is no demand for *gur* of superior quality and cleanliness, and the cultivator does not find it as yet worth his while to make first-class *gur*, as he cannot get an adequate price for it: on the other hand, he is likely to suffer loss from the diminution of weight, which will no doubt result from the removal of the impurities. The boiling is continued for about two hours. Towards the end the syrup becomes thicker and apt to get burnt against the surface of the pan. A brisk stirring with a wooden rake is kept on all the time, until the *gur* has attained its proper consistency. The latter can be only guessed by the practised eye, and by feeling the thick syrup while yet hot between the fingers. When the *gur* is ready in the pan, the latter is taken down from the furnace and placed over a low earthen mound; the stirring with the rake is kept up until the *gur* gets thick enough on cooling. It is then ladled out into oblong forms of wood, about 16 inches long, 10 inches broad, and 4 inches thick, called *kátorás*, and allowed to gradually cool and solidify. In about three hours time the mass becomes quite hard, and is then taken out of the *kátorás* and becomes ready for the market. These square blocks of *gur* are known as *chákis*. These are very convenient for transport as they can be readily packed in bags, and are not in the least subject to drainage of molasses like the *ráb*.

Sugar is not manufactured anywhere in or near Palámau, and consequently very little *ráb* is made. Its only use in Palámau is for making a cooling drink (*sharbet*) taken in hot weather. To make *ráb* the syrup is taken down from the pan in a slightly thinner condition than that of syrup intended to make *cháki gur*. The *ráb* syrup is poured into earthen vessels.

Outturn of gur and cost of cultivation.—In Palámau 4 seers of juice are expected to yield 1 seer of gur. The juice must be very rich in saccharine matter to be able to yield this remarkably large proportion of sugar concrete. In Bengal the proportion of *gur* to juice seldom exceeds 1 to 5, and is very often as low as 1 to 7 or 8.

One local bigha of cane is expected to yield from 25 to 30 local maunds of gur. This gives in standard measure 22½ to 27 maunds of *gur* to the acre. *Cháki gur* sells in Palámau on the average at 26 *kachchá* or 14½ *pákká seers* for the rupee. The outturn of one local bigha sold at this rate would be valued at from Rs. 48 to Rs. 57.

The cultivation of sugarcane by hired labour does not pay in Palámau, as indeed it would hardly do in other parts of Bengal. It involves a heavy strain upon the cultivator, and unless he has a sufficient number of hands in his own family, he never thinks of undertaking its cultivation. The usual plan is for several ráyats to combine and help each other by turns in cultivating parcels of land all lying close to each other. In this way hired labour can be mostly, if not entirely, dispensed with.

The following is the cost of cultivating one local bigha of sugarcane. The manures and the cane-cuttings have not been charged for, as these are seldom bought. The wages of labour and hire of plough have been taken at higher figures than the average, first, because the rates of wages in the north of the sub-division where sugarcane is grown are higher than the average for the sub-division, and, secondly, because higher wages are always paid for all laborious work like irrigation.

Cost of cultivation.

	Rs.	A.	P.
Twenty-five ploughings with harrowings at Re. 0-5 per ploughing	7	13	0
Planting (three ploughs at Re. 0-5 per diem and 6 men, viz. 2 to lay cuttings, 4 to supply, at Re. 0-1-9 each)	1	9	6
Four waterings (one watering takes seven men four days ∵ 7 × 4 × 4 = 112 men at Re. 0-1-9)	12	4	0
Three hoeings following irrigation (one hoeing takes three men seven days ∴ 3 × 7 × 3 = 63 men at Re. 0-1-9)	6	14	3
Two hoeings in the rainy season (three men for two days at Re. 0-1-9) for each hoeing	1	5	0
Trenching (six men at Re. 0-1-9)	0	10	6
Thorns (20 loads at 2 annas)	2	8	0
Rent of one local bigha	6	0	0
Total cost of cultivation ...	39	0	3

Cost of gur-making.

	Rs.	A.	P.
Hire of machine and pan for 10 days at Re. 0-8 per diem ...	5	0	0
One man to feed the machine for 10 days and 10 nights at Re. 0-1-9	2	3	0
One man to drive bullocks for 10 days and 10 nights at Re. 0-1-9	2	3	0
Five men to cut and clean canes for 10 days at Re. 0-1-9 each per diem	5	7	6
One man to feed fuel for 10 days and 10 nights at Re. 0-1-9	2	3	0
Total cost of gur-making ...	17	0	6
Cost of cultivation	39	0	3
Cost of gur-making	17	0	6
Total ...	56	0	9
Average outturn of gur per local bigha =28 local maunds, valued at 26 local seers per rupee	51	11	9

It would thus appear that the cultivation of sugarcane would not pay if every item of labour was charged for at the daily rates of wages. It is for this reason that no ráyat will attempt the cultivation of sugarcane unless he has a sufficient number of hands in his own family to work in the field. To avoid the necessity of hiring labour, it is a common practice for several ráyats to combine and cultivate a field of sugarcane either jointly or in separate parcels, all the men helping one another by turns.

Remarks.—The cultivation of sugarcane, as it is now carried on in Palámau, is very negligent. The cuttings are planted, or rather sown, at random and are covered with a very light covering of soil. During the rainy season it is found very difficult to hoe the field: the growth of leaves becomes so thick and close that the interior of the field may be said to become proof against air and light. Cane-fields are much better managed in the central districts of Bengal, where *samsera* and other larger kinds of cane are grown. In these districts the cane-fields are beautifully laid out in lines and furrows, and the canes are carefully wrapped up in leaves during the rainy season, thus admitting of plentiful air and light. The canes are, besides, plentifully manured with oil-cakes and hoed and earthed up at frequent intervals during the rainy season. It is no wonder therefore that, while the Palámau ráyat considers himself happy to get 25 maunds of gur per acre, the ráyats of Hooghly and Burdwan would not consider the cultivation paying under 60 maunds from the same area.

For further suggestions, I beg to refer to page 81, Part I.

2. Poppy—(*Papaver somniferum*).

Extent of cultivation.—Poppy is grown only in the north of the sub-division in a plain alluvial tract of country stretching east and west between Harihar-ganj in Deogán to Sonepurá in Belaunjeh. It is grown mostly by Koeris or vegetable gardeners, and occasionally by Rájputs and other cultivating castes.

Lands suitable for poppy cultivation.—For poppy cultivation, irrigation from a well is absolutely necessary. For this reason its cultivation is usually confined to lands near the village site, such as can be conveniently watered from the village wells. *Bheetá* or outlying uplands are sometimes selected for poppy; but on such lands temporary wells have to be dug as for sugarcane.

Advances for poppy cultivation.—In every village or group of villages where poppy is grown, there is a head-ráyat known as the *lambardár* (literally *one who bears a number*) who takes advances from the Opium depôts at Sahebganj (Gayá) and Daudnagar, and distributes them among the ráyats of his *mahal* proportionately to the areas of their cultivation. The usual rate of advances is Rs. 5 per bigha, of land thrown under poppy. The *lambardár* gets a commission of 12 annas per bigha, and acts as the intermediary between the Government and the ráyats in all matters relating to the cultivation of poppy within his jurisdiction.

Cultivation.—The preparation of the land begins in September, as soon as the rainy season is fairly off. During this month and October, some eight ploughings are given, each being followed by a harrowing. Poppy is manured with old cowdung, ashes and sheep's dung in the same way as sugarcane. Before the sowing takes place, the larger clods which have escaped being reduced by the harrow are broken by the *phárua* or spade. The sowing season extends from the beginning of November to the middle of the next month ; the earlier the sowing the better the crop. Before the seed is sown the land has to be lightly watered, if dry, and levelled by the harrow. The seed is sown broadcast and lightly covered up with loose soil by drawing the harrow over the land. The land is then dressed by low ridges into oblong terraces (*gánreris*) about 8′ by 6′ for the convenience of irrigation. These are watered at intervals of eight to twelve days according to the dryness of the soil. Altogether some eight waterings may be required. When the plants are young, each watering is followed by a hoeing with a small hand-hoe called the *beswai*, similar in appearance to the *phárui*, but much smaller in size.

The poppy flowers come up in about three months after the seed has been sown, and the capsules (*dhenris*) are fully formed in a month after the flowers have appeared. When these have become hard enough, the process of incising them for the purpose of extracting the opium commences. The capsule is scratched with a *nirháni* from the bottom to the top in one place. The scratching is repeated at intervals of 3 days 4 or 5 times altogether in parallel lines round the capsule and is continued as long as the capsule is green enough to exude the resin. The incisions are made during six hours in the afternoon, and the opium which has exuded during the night from the openings is collected during the six hours in the next morning.

After the collection of opium is over, the capsules are allowed to mature. Within a fortnight they become fully ripe and are picked. The capsules are broken open by a stone, and the minute grains of poppy-seed which they contain inside are collected. The outturn of seed averages two maunds and a half (*pákká*) per local bigha, and is valued at Rs. 6.

Special rates of rent are levied by zamindars for poppy as for sugarcane. The usual rate per local bigha is Rs. 5 exclusive of cesses, which come up to close upon Re. 1.

Outturn.—The produce of opium from a local bigha of land varies from 3 to 10 seers—the common and average outturn being six seers. The price of opium sold to the Government depôts by the cultivators varies from Rs. 3 to Rs. 5 per seer according to the quality of the article. One bigha of poppy is expected to turn out about Rs. 25 worth of opium and Rs. 6 worth of poppy seed.

Section 7.—*Fodder-supply.*

I beg to refer to what I have said *à propos* of this important subject in Part I of this report. The ráyat's supply of stored fodder consists of paddy, straw, and *bhusá* of the rabi crops—wheat, barley, gram, *khesári*, peas, *rahar*, and lentils. The insufficiency of fodder is partly relieved in Palámau by the existence of vast areas of jungle waste in this sub-division and in the neighbouring country of Sargujá. The method of pasturing cattle and buffaloes in those jungles will be described in detail in the section on live-stock.

Section 8.—*Fuel supply.*

The supply of fuel is very abundant as yet in Palámau. Except in some well-cultivated villages situated in the valleys of the Ámánat and the Koel, and in the narrow strip of alluvial country in the north, every village in Palámau has an area of jungle waste in which its inhabitants have the right to collect fuel and small wood.

The chief and abundant supply of wood fuel does not altogether prevent the manurial waste which is supposed to result from burning cow-dung as fuel. Indeed, as I have pointed out in dealing with the question in Part I, the burning of cow-dung may be scarcely said to be a waste, or considering that for many of his crops, such as *máruá* and paddy seedlings, the ráyat is compelled to reduce the dung to ashes before applying it to the field, and he would be so much the wiser if he did it in his house rather than in the field.

SECTION 9.—*Live-stock.*

The chief domestic animals of Palámau are cattle, buffaloes and sheep. There are no statistics to show the number of these animals in the sub-division. The south and south-western tuppehs may be described as a vast grazing ground, where a considerable number of cattle are bred; large herds of she-buffaloes are also pastured in these parts. The remainder of the sub-division, with the exception of the well cultivated river-valleys, is coated with a thin covering of jungle, in which the village herds of cattle and buffaloes are pastured.

Cattle.—There is only one breed of cattle in the sub-division which is about the same size as the cattle of Chutiá Nagpur Proper. In recent times the cattle of the western tuppehs have been much improved by crossing with half-bred bulls from Behar. A large number of cattle are bred in the southern and western tuppehs from which they are exported to other parts of Palámau. In these tuppehs the cattle are pastured in the forest all round the year. The cows are not usually milked, and the calves are allowed almost the whole of their mother's milk.

The village cattle are, however, fed and reared in a different way. Besides pasturage, both the working and milking animals are fed on rice, straw and *bhusá* of *rabi* crops from the close of the rainy season until the beginning of the next rains. During the rainy season, the grasses become abundant, and the want of dry fodder is not felt. The use of oilcakes, bran and grains for the feeding of cattle is never thought of, excepting for favourite cows such as are often kept by wealthy people.

The village cattle are tended by the common herdsman or *áhir*, who charges half a maund of grain per pair of bullocks, and double this quantity for a pair of buffaloes. For milch-cows the *áhir* gets two pice per head per mensem from the owner. Breeding cows are sent up for grazing to the forests in the west of the sub-division and in Sarguzá, the herdsmen charging the owners one anna per head of animal for the dry season.

The cows of Palámau are very poor milkers, one-half to three-quarters of a seer of milk being considered the average yield. Such cows usually sell from Rs. 7 to Rs. 10 each. A pair of oxen usually fetch from Rs. 20 to 25, often as little as Rs. 10, and seldom more than Rs. 30.

Buffaloes.—Buffaloes are much more esteemed as milking animals than cows in Palámau. Although large herds of buffaloes are met with in every part of Palámau, especially in the jungly tracts in the south and west of the sub-division, none of them are used as working animals. The young male animals are drafted to Chutiá Nágpur Proper, where buffaloes are used in preference to bullocks.

There are two ways of pasturing buffaloes. In some parts they are pastured during the rainy season and the cold weather in the neighbouring jungles. With the advance of the hot weather, the jungles gradually become thinner, and grass and water scantier. In February the animals are brought back to the village, where they are fed on stubble, straw and *bhusá* until the rains set in again. But the prevalent custom is to send up the herds of buffaloes to the forests in the mountanious country in the west of the sub-division and in the adjoining State of Sarguzá, at the approach of the hot weather in January. They are kept there until the advance of the rainy season, when they are driven back to the jungles near their respective homes. In zamindári forests, the owners levy a tax of two annas per head of buffalo, and one seer of ghee per *thák* or herd which consists of 24 heads of buffaloes. For cows no tax used to be levied, but in recent years, some zamindárs have levied a tax of one anna per head. In the Government forests, grazing dues have been levied since 1870 at the consolidated rate of three annas per head of buffaloes. Cattle are exempted from this tax. Besides pasture grass, the milking buffaloes get a ration of oilcake varying from a quarter to half a seer per head per diem during the dry season. During the rainy season, grass becomes exceedingly plentiful, and no artificial food is required to be given.

The yield of milk of a she-buffalo in Palámau seldom exceeds 2½ seers per diem. Such an animal would sell for Rs. 25, but the prices are usually much less. The price of a three-year old animal varies from Rs. 6 to Rs. 10.

Cattle-diseases.—The two usual cattle epidemics of Bengal—rinderpest and foot and-mouth disease, are known also in Palámau. They have been described in detail in Part I of this report.

Dairy produce.—The most important dairy produce of Palámau is *ghee*, which is one of its chief articles of export. Nearly two lakhs of rupees worth of *ghee* is annually exported from this sub-division. The western tuppehs are the chief seats of the dairy industry, but it is general all over the sub-division. The greater portion of it is made from buffaloes' milk. When there is a large number of cows, as well as of buffaloes, the milk of either is kept and churned in a separate vessel; but, as a rule, the milk of both is mixed up and churned together. The ghee usually sold in the market is a mixture of cows' and buffaloes' milk. The actual method of *ghee* manufacture need not be described, as it differs in no respect from the practice of other Bengal districts. It is estimated that twenty-one seers of cow's milk and fifteen seers of buffalo's milk would yield one seer of ghee. The butter-milk or *máthá* is retailed by *áhirs* at the rate of three or four seers for one seer of grain. The *máthá* is a cherished beverage, especially in the hot weather, and is taken with boiled rice, *roti*, boiled maize and *máhuá* It is also given as a cooling drink to milking buffaloes.

Ghee sells on the average at two seers for the rupee. In the rainy season it becomes cheaper owing to the temporary suspension of exports and the greater production duing this time when the buffaloes are in the height of their flow. The *áhirs* are most of them indebted to *mahájans* to whom they are bound to sell their *ghee* at stipulated rates, which are said to be 25 per cent. cheaper than those prevailing in the markets.

Sheep.—The Palámau breed of sheep is of a prevailing black colour, occasionally of a mixed black and white, but rarely of a pure white colour. They are slightly smaller in size than the sheep of South Behar, and are inferior to the latter in respect of the length of the staple and the quality generally of their wool.

The sheep are shorn thrice in the year, viz., in Kártic (October—November), Fálgun (February—March) and Ásár (June—July). The Fálgun fleece which is grown during the cold weather is the heaviest and cleanest of the three; the Ásár and Kártic growths are smaller in quantity, rougher and contain a great deal of filth. Before shearing, the animals are washed in water either by dipping several times in water, or making them swim across a river or pool of water. The shearing is done with a specially sharpened sickle. The weight of a fleece varies from $\frac{1}{4}$ to $\frac{1}{2}$ lb. A sheep may therefore yield from $\frac{3}{4}$ to $1\frac{1}{2}$ lbs. of wool in the year, valued roughly at 5lbs. per rupee. Almost the entire produce of wool is woven up into coarse blankets in Palámau, and exported thence to Chutiá Nágpur, Házáribágh, and Sarguzá.

The sheep are fed entirely on pasture grass and the leaves of various wild shrubs, such as the *baer*, *kátái*, *chákonr*, *kénkur*, &c. Once a fortnight they receive an allowance of about a *tola* weight of *khárid* salt. This is said to keep the animals in good health, and to act as a preventive against epidemic diseases. In the dry season the flocks are taken to deep forests, whence they are driven back nearer home on the advent of the rains.

In Bysák, the flocks are sub-divided into *tháks* of 200 heads each. Three or four rams are let loose in each *thák*. The lambs begin to fall in Kártic, and continue to do so all over the year, excepting in Srávan, Bhádra and Áswin when the shepherds who are also cultivators remain too busy with field-work to attend to the nursing of the lambs. To prevent lambing during those three months, the rams are kept confined in the house during the period from Mágh to Cheyt. Young mothers are kept in the house, and pastured separately in the neighbourhood of the village, until the lambs have grown sufficiently big and strong. The lambs are castrated at about six months old.

A yearling sells for Re. 1 to Re. 1-4, and two-year old for Re. 1-8 to Rs. 2. The wethers, when about a year old, are bought off for the Calcutta market by *beparies*; they are then pastured for six months more and then driven down to Calcutta. On their way they receive rations of gram and oilcake, and reach Calcutta in good and ready condition.

Ewes are milked during the six months from Ásár to Mágh, and their milk is either taken by the shepherds themselves or made into ghee. Ewe milk ghee is considered to be a medicine for rheumatism, and for mouth sores.

Like cattle, sheep are subject to rinderpest. The shepherds, however, allege that the two forms of rinderpest are distinct from one another. No treatment is known for the rinderpest among sheep. The sheep are also subject to several other kinds of disease. The principal among them are *sakbághá*, *phulbághá* and *sardi* or catarrh. In *sakbágha*, the animal loses appetite, becomes worn and languid, and in about two months dies of emaciation. The only treatment known is to blister the two sides with red hot iron. The *phulbághá* appears to be a severe form of anthrax being characterized by a sudden and rapid swelling of the belly followed by prostration and death in a few hours. The disease cannot be hoven as improper feeding is never alleged to be its cause. The *sardi* is a malignant form of catarrh, ending fatally in many cases. As a remedy, the forehead is blistered with red hot iron, firing being the only remedy known to the *gánreris* or shepherd caste in all diseases of the sheep.

CHAPTER IV.—*Land tenures.*

The land tenures of Palámau have been so fully reported upon by Mr. L. R. Forbes, Assistant Commissioner of Palámau, that my enquiries could elicit no further information on the subject. There is a long-pending dispute regarding the relation between Government as landlord and the superior tenure-holders of parganá Palámau. Mr. Forbes dealt with the various aspects of the dispute in a thorough and comprehensive manner, by bringing to bear upon the subject the information furnished by various old records. The following, reproduced from Dr. Hunter's Statistical Account of Lohárdaggá, is derived from Mr. Forbes' report above alluded to—

The Sub-division of Palámau embraces the three Fiscal Divisions of Palámau, Belaunjeh, and Japlá, the tenures in each of which will be separately treated The Fiscal Division of Palámau itself is further subdivided into fifty-five *tappás* (*tuppehs*), and some of the smaller of these are again grouped into circles called *chaklás* From the vague wording of some of the earlier documents on the land administration of the country, Mr. Forbes infers that all the larger *tappás* and the present *chaklás* were at one time separate *parganás*. For Pundág, one of the largest of these *chaklás*, is used in the *Aín-í-Akbarí* as a synonym for Palámau, and reappears as Pendách in the "Fifth Report" (Madras Reprint, 1866, p. 518). The *tappás* may at one time have constituted separate estates, but have ceased to do so now.

The Superior Land-Tenures of Palámau, with their present number as estimated by Mr. Forbes, are the following:—"(1) *Jágír Bábuán*; maintenance grants made by the Máhárájás of Palámau to their near relatives. Some of these grants were hereditary, and others not; but none were alienable, and, in default of male-heirs to the grantee, the lands reverted to the Máhárájá Estimated number, 58. (2) *Service Jágírs*; grants made in lieu of payments for various civil, military, or political services rendered; some were hereditary and others not; number, 446¾. (3) *Jágírs kánungo and kázi*; grants made in virtue of the office held, and in lieu of official salaries; number, 37. (4) *Jágír cheroán, kharwár and bhogtá*; all similar tenures, being grants made as rewards or in return for military services, to those tribes who were the original soldiers of the *parganá*; number, 1,022½. (5) *Jágír inám*; grants for services rendered during the rebellion of a Chero *sardár* in 1802 A.D.; number, 109½. (6) *Jágír mutafarrikát*; simple *jágírs*, for which no special terms or conditions are laid down; except the fixed amount of quit-rent; number, 21. (7) *Ijárá*; tenures under which villages are held on lease for a specific term of years; number, 10 (8) *Ijárá khairát*; charitable grants, 23 in number. (9) *Ijárá mukarrarí*; grants that have descended from father to son for many generations, without any variation of *jamá* or rent; number, 3. (10) *Ijárá bai patrá*; grants for lands that had been purchased out-and-out by the occupants, 90½. (11) *Ijárá jágír and inám*; rewards granted for miscellaneous services, 20. (12) *Ijárá jamá brit*; grants held under mortgage, 5½. (13) *Minhái mahals*; as the term implies, rent-free holdings given for various reasons, but generally as maintenance or charity grants to *fakírs* or religious mendicants, Bráhmans, Bháts, &c., 502 in number. (14) *Deori and khálsá mahals*; the lands that were reserved by the Rájá for the Ránis, or for his own immediate wants. These lands became, and still are, the Government villages; 402 in number."

"All the foregoing tenures were created by the Cheros who began their rule in Palámau in 1613, as independent chieftains owing allegiance, it is believed, to no one. About fourteen years later, they became subject to the Muhammadans, who treated the country as a fief, and whose sole interference consisted in the exaction of a yearly tribute. In 1773 A.D., the *parganá* was taken possession of by the British Government, and treated as a Tributary Estate, the Settlement which took place at this time being made by Mr. Camac, the Government Agent at Patná. After this Settlement, the *parganá* was much disturbed by disputes among the different branches of the ruling family; and in 1784 A.D, Churáman Rai, the last of the Chero Máhárájás, succeeded to the *gádi* or State cushion as a minor. Sheo Pershad Sinh, one of the *thákuráis*, or relatives of the chief, became regent; and the *sanad* was drawn up in his name, the most curious part of which is that no mention whatever is made of the Máhárájá

himself. In 1789 A.D., a second Settlement was effected, which has since been known as Mr. Mathew Leslie's Settlement. This officer not only settled the revenue payable by the Máhárájá to Government, but he also drew up a list of the *jágírdárs* and other tenure-holders, fixing the *jamá* payable by them to the Máhárájá. At the same time he prepared a general register of estates and made a settlement of the *khálsás*, or lands held in demesne. Shortly after this the minor Rájá, Churáman Rai, came of age; through extravagance and other causes he fell into arrears with his revenue, which led to an inquiry being set on foot and the attachment of the *parganá*. Eventually, in 1814 A.D., the estate was brought to auction, and purchased by Government. Just before this, in 1812 A.D., what is known as Mr. Perry's Settlement had been concluded. I believe that Mr. Perry gave the *jágírdárs* an acknowledgment of their title on behalf of Government; while from the *ijárádárs* he took simple *ikrár-namás*, or engagements to pay a stated rent. Two or three years later, in 1816 A.D., the Government bestowed the entire *parganá* upon Rájá Ghanesám Sinh of Deo in Gayá, as a reward for military services. The Rájá acting as he believed within the terms of his *sanad*, commenced a system of interference with certain of the tenure-holders; and this and certain acts of oppression on the part of his servants having caused an insurrection, the Government resumed the grant.

"It appears from early correspondence that Mr. Mathew Leslie recognised certain tenure-holders styled *jágírdárs* as proprietors, whose long and unquestioned possession entitled them to hold on a fixed rent, and he treated them accordingly. All other lands he appears to have dealt with as being either under temporary settlement, and liable to interference and resettlement by the Rájá, or as lands held in demesne. Mr. Perry appears to have somewhat disturbed Mr. Leslie's Settlement. But I gather from the following extract from a letter to the Secretary to the Board of Revenue, which would appear to have been written about the time of the dispossession of Ghanesám Sinh of Deo, that the *sanad* granted to Ghanesám Sinh expressly limited the benefit of the interference of Government to a certain class of people called *jágírdárs*, who had been for a long time in possession of certain lands at a fixed *jamá*; and stipulated for all such individuals, a perpetual continuance of the said lands at the *jamá* fixed for them by Mr. Leslie. 'With the exception of such lands as are described to be *jágírdárí* tenures in that settlement, the *sanad* leaves the Rájá (*i.e.* Ghanesám Sinh) and his heirs at full liberty to make their own arrangement with the *farmers* of the *parganá*.) If this be a true extract from the *sanad* granted by the Government, it is not very difficult to arrive at a conclusion as to what the Government rights as a landlord are, or were. It must be borne in mind that Mr. Leslie's Settlement bears the date 1790 A.D., at which time the last of the Máhárájás, Churáman Rai, though a minor at the time, was on the *gádí*. From my own experience, I believe that very few of the tenures called *ijárás* were then in existence. Most of them bear the signature of, or purport to have been granted by, Churáman Rai, and were most probably created by him in his later difficulties. Mr. Perry appears to have treated these tenure-holders in a temporising manner, and eventually to have merely taken agreements from them for the payment of their rents; whereas the course undoubtedly open to him was to have dealt with simple *ijárás* as farms liable to settlement. Where, however, there had been a money premium, and the *ijárá* was in the form of a mortgage, he should have advised a foreclosure. There can also be no doubt that the Government, when making over its rights and privileges to Ghanesám Sinh, passed over Mr. Perry's arrangements altogether, and took its stand upon the earlier Settlements of Mr. Leslie. All these rights and privileges were resumed by Government, on its taking back the *parganá* from Ghanesám Sinh. I would therefore describe the rights and privileges of the Government as a landed proprietor in Palámau thus:—(1) The Government cannot disturb the possession of those ancient *jágírdárs*, whose estates are enumerated, and whose *jamás* were fixed by Mr. Leslie, so long as they continue to pay the revenue with regularity. (2) The Government can, however, resume any of those *jágírs*, in case of failure of lineal male-heirs of the original grantee, according to ancient custom, whether such a condition is or is not specially mentioned in the *sanad*, as also in case of failure to pay the Government demand; and on resumption may deal with the estate as one held in demesne. (3) The Government, as superior landlord, can call upon its feudal tenants or *jágírdárs* above mentioned of all denominations to render such service as from ancient custom they are bound to render. This service includes the furnishing of men, ammunition of war, supplies, and money, as their quota towards the proper preservation of peace within the *parganá* and the protection of property; and of *madad* or assistance, each according to his means (*hasb-ul-liákát*), in making and keeping up roads and bridges within their several estates. In the exercise of the above rights, the Government during the long course of years that has elapsed since it took up the direct management of the *parganá*, has frequently resumed *jágírs* on failure of male-heirs. It has also on several occasions called upon the *jágírdárs* to render service, and to furnish ammunition and supplies.

"The foregoing only refers to the rights of the *zámíndár*, that is the Government, in respect to the *jágírdárí* estates. Of the rights of Government in respect to those tenures called *ijárás*, I am not quite sure. It is clear that the Government never contemplated assigning them the rights and privileges of full proprietors, which were accorded to the *jágírdárs*. In my opinion the Government possesses the right of stepping in at any moment and making a resettlement of all tenures, the *pattás* or leases of which bear date subsequent to 1790; but it could not disturb possession, unless there was a refusal to accept settlement, in which case the *ijárádár* would probably be entitled to *málikáná*, or monthly allowance regularly made to dispossessed land-holders.

"In describing the rights of Government as superior landlord, I have incidentally enumerated those of the *jágírdárs*. I would merely add that their tenures cannot be sold for arrears of rent or revenue; that they are bound to pay the Government demand when due; and that on failure to do so, their *jágírs* became liable to resumption. This extreme measure would, however, appear to have been rarely taken, the usual course being attachment. The *jágírdárs* are prohibited from disposing of their estates by sale. As a matter of fact, they not only openly dispose of them in this manner, but their estates are also brought to the hammer under decree of Court; but in either case the sale is at the sole risk of the purchaser, who is not protected in case of the resumption of the parent estate.

"SUB-TENURES.—The next link in the chain is formed by those rent-paying sub-tenures which are immediately subordinate to the superior tenures, and intervene between them and the peasant holdings. First in order come those sub-tenures which, in name and nature, hold exactly the same relative position to the superior tenures that the superior tenures do to the Government, the *zámíndár*. The *jágírdárs* of the *parganá*, following the example set them by the Mahárájás, in their turn gave portions of their estates in *jágír* on terms identical with their own. Each *jágírdár* had to provide the younger branches of the family with maintenance, so that each large *jágírdárí* estate represents, as it were, a facsimile of the head estate or *zámíndárí*. These *sub-jágírs* and other tenures of old date are all service grants, and liable to resumption by the superior tenure-holder on failure of heirs It is only those estates created in later times, such as *mukarrarí* mortgages, &c., granted for a consideration which are not liable to resumption by the superior *jágírdárs*. As in the case of superior tenures, the rents of the sub-tenures are merely nominal, the superior tenure-holder being content with what he could squeeze out of his *sub-jágírdárs* under cover of the term *madad*. This is, however, no longer the case, and the *madad* is not so easily obtained as in former days; the *sub-jágírdárs* having learnt that while the landlord can get a decree for his rent, the Court will not take cognizance of a claim for anything which is not rent. After these come the several classes of lease-holders, *sár-i peshgidárs*, permanent and temporary leases, which in themselves require no special explanation. The only thing remarkable in the engagements under these leases is the absence of all mention of peasant rights. The only tenures which these farming leases, as a rule, recognise at all are the rent-free tenures. There is a peculiar form of lease bearing no special name, though it might with propriety be called a *jangalburí* lease. It consists in the separation from the rest of the village area of a certain tract of jungle land within certain specified boundaries, denominated a *khát*. The leases invariably direct the lessee to clear the jungle and bring the land under cultivation. Sometimes they provide for a quit-rent, and give the land to the lessee and his heirs to hold as long as the rent is regularly paid; in others, the lease is temporary and not hereditary; while in others, again, there is a right of enhancement clause. Many of these leaseholders have been in possession for several generations, and no longer consider their tenures as a portion of the parent village; and in some instances during the Revenue Survey they were treated as distinct *mahals*. It is impossible to assign any specific rights to this class of tenure-holders, there being such a variety of practice in regard to them. Each would have to be judged on its own merits."

"RENT-FREE TENURES.—The rent-free tenures of Palámau may be broadly divided into two classes—those created by the Máhárájá, and those created by the *jágírdárs* and other superior tenure-holders within their estates. The following is a list of the several kinds of rent-free tenures as existing at the present day:—Religious grants—(1) *Kus khairát*, (2) *Vishnu brit*, (3) *kus brit*, (4) *guru pujá kus brit*, (5) *Seo prit*, (6) *kus betalab chandra grahan*, (7) *kus betalab sankalp*, (8) *dán betalab sankalp*, (9) *kus surjyá grahan*, (10) *Vishnu prit masrat badán asirbád*, (11) *Seo prit masrát pujá Seo*, (12) *dakshiná harbans*, (13) *guru dakshná kus brit*, (14) *kus betalab*, (15) *Seo prit khairát*, (16) *Seo prit sankalp*, (17) *kus sankalp*, (18) *kus sankalp masrat*, (19) *khidmat Mahádeo*, and (20) *brit khairát*. Rent-free grant to commemorate recovery from leprosy—(21) *kusht sánt nimártik*. Grants made in reward of service—(22) *khairát inám*, (23) *jágír lakhiráj*, (24) *jágír inám*, (25) *inám*, (26) *jágír ba-shart khidmat thánádárí*, (27) *brit inám*, (28) *jágír inám betalab*, and (29) *jamá kháraj madad másh*. Vow of relinquishment—(30) *Seo nirmayi*. *Kázi jágír*—(31) *kus brit kázi*. Reward for honourable wounds given in lieu of blood money—(32) *khun báhá jágír*. Simple rent-free tenures— 33) *brit betalab*, (34) *khairát betalab*, (35) *brit*, and (36) *khairát*.

"Many of the tenures comprised in the above list contain revenue or rent-free estates of considerable extent. The most important is the service tenure No. 26 in the list, which comprises the estate known as the Nagar Untárí *mahal*, consisting of 301 villages. This estate seems to be as ancient as the original Palámau estate, and to have been separate and distinct from it. In fact it would appear to have constituted at one time a separate *parganá*. The proprietors who hold the title of *bhayá* do not originally appear to have been vassals of the Chero Máhárájás. The estate was constituted a royal grant, long prior to the creation of *parganás* Japlá and Belaunjeh into a royal *altamghá* grant, and was granted to the *bhayás* as a *ghátwáli* tenure for the protection of the Behar boundary. The *bhayás* are a branch of the Sónpurá family of Belaunjeh, being the descendants of the elder wife of one of the Rájás. In the Sónpurá family it is a custom for the first-born son to succeed, whether born of the elder or the younger wife. The title of *bhayá* sprung from the fact that on one occasion the elder wife had a son after the younger wife, and the question of title was settled by calling this son *bhayá* or brother. The *sanad* of the Untári estate provides for the maintenance of the police; and up to the present date the cost of the entire imperial police force within the estate is maintained by the *bhayá*.

"Most of the rent-free tenures in Palámau are hereditary, either by express terms or from long-established custom. Some of the holders are possessed of *sanads*. But by far the greater number have merely little scraps of paper said to be *wáguzáshts*, or confirmations of original *sanads* granted chiefly by Rájá Churáman Rái; and in nine out of ten cases the chances are that these so-called *sanads* are forgeries, set up chiefly at the time of the earlier Settlements.

THE FOLLOWING CULTIVATING TENURES are found in Palámau :—(1) *Pariádári*, (2) *utakár* or *bighawtá*, (3) *kanwá* or *ánná* system, (4) *bháoli*, and (5) *bári*. "(1) The *pariá* system of holding is a creation of the aboriginal tribes, and has arisen out of unwritten custom. It consists in dividing off certain of the village cultivated lands into *pariás* or shares, the general number being 16. The gross rent of the village being then ascertained, the total is distributed equally among the *pariás*. The lands generally chosen to be the basis of the *pariá* are the rice lands; but where there are no such lands, what are called the *dih* lands, *i.e.*, the permanently cleared high lands immediately surrounding the village homestead, are chosen, or sometimes the *bári* or homestead land; and even in some cases I have known the *mahuá* trees to form the basis of a *pariá*. Each holder of a *pariás* has the right to occupy as much up-land as he can afford to cultivate without being called upon for any further payment of rent. But these cultivators, holding only a fraction of a *pariá* and paying of course only a fraction of rent, have also an equal right to cultivate as much up-land as they choose; so that in the same village may be seen one cultivator with a holding, say, of one *pariá* consisting of three *bighás* of rice land for which he pays a rent of Rs. 30, and cultivating as attached to his *pariá*, say, 50 *bighás* of upland; while another cultivator holding, we will say, ten *káthás* or one-sixth of a *pariá*, for which he pays Rs. 5, will also be found cultivating 50 *bighás* of up-land without any further payment of rent. The only remedy the landlord has against this is to limit the area of up-land that fractional holders of *pariás* can cultivate, and to assess any up-lands they may wish to hold in excess. This was rarely done in former days, but the landlords have now begun to act in self-defence. In the Government farms under the *rayatwári* settlement, a standard *pariá* was set up, and the proportion of up-land which could be held with it was fixed. The area of a *pariá* was declared to be three *parganá bighás*, and might consist either of three *bighás* of the same quality of land, or it might be a mixed *pariá*; but of whatever quality it might consist, the up-land attached to it is the same, *i.e.*, a first-class *pariá* consisting of three *bighás* first-class rice-land would carry with it three *bighás* first-class up-land, whereas one consisting of, say, one *bighá* of first-class and two of third-class land, the up-land to be attached to it would likewise consist of one *bighá* first-class and two of the third-class. (2) In the *utakár* or *bighá* system, rent is paid for each *bighá* of land held. No further explanation is necessary. (3) The *kanwádári* system, strictly speaking, is the division of the entire village area into 16 *ánnás* or *kanwás*, each holder of a *kanwá* having a right to a sixteenth of the village area, including cultivation and waste. This is the theory, but in practice I have never found it to be so, except where the holders of the *kanwás* are not only *rayats* but also shareholders; otherwise I have found that as a rule the *kanwá* division extends only to the lands actually under cultivation, the landlord, or farmer, or whoever he may be assuming to himself the right to lease lands to *páikasht* or non-resident *rayats*, charging them rent for the same, and to settle new cultivators without any claim being set up by his co-partners, the *kanwádárs*. (4) *Bháoli system.*—This system prevails only in those *mahals* bordering on Behar, and in *pargánas* Belaunjeh and Japlá. The system is peculiar only in respect to the mode of assessment, and not to the distribution of land, which is the simple *bighá* system. Under the *bháoli* system the rent is payablei n kind—that is to say, there is a division of crops. No *pattás* are given for lands held under this system. There are two methods of ascertaining the amount of grain or rent payable by the *rayats*—*dánábandi*, and *battayá*. Where the rent is assessed on the *dánábandi* system, an estimator or *shudkár* is sent to the land to value or estimate the crop when it ripens. The person chosen for this work is supposed to be a disinterested person, whose opinion may be relied upon. After the *shudkár* has delivered his estimate, the *dhanbháká* or village *panchayat* is appointed, partly by the landlord and partly by the *rayats*. The members of the *dhanbháká* visit the land accompanied by a *kátmárá* or measurer, or by the *patwári* or some other village accountant or writer. They pass regularly from field to field measuring and estimating the crops, the *patwári* recording opposite each *rayat's* name the amount or weight of grain estimated; half of this amount belongs to the landlord or person entitled to the rent, and half to the *rayats*. After the whole has been completed, each *rayat* is furnished with an abstract of the estimate, showing him exactly how much grain he has to deliver. This abstract is called an *utere*, and is the only proof the *rayat* possesses of his occupancy and his payment of rent. All village titles, which by custom are payable by both parties, are deducted from the quantity estimated before making the division. The amount entered in the *utere* is unalterable, whatever the actual outturn may eventually prove to be. Where there is no collusion, the estimates are generally pretty accurate; but very frequently the members of the *dhanbháká* have a private understanding with the cultivators, and sometimes they are the paid creatures of the landlord. Under the *dánábándi* system, after the estimates have been made and the *utere* distributed, the landlord has nothing more to do. Each *rayat* brings his proper quantity of grain or its equivalent in money, according to market rates, as may be agreed upon. Under the *battayá* system there is no estimate of crops. The division takes place on the threshing-floor. Here the landlord has much more trouble than under the *dánábándi* system. From the moment the crop is ripe and fit to cut to the

time he proceeds to weigh it on the threshing-floor, he has to keep watch night and day to prevent being defrauded. Lands formerly held on the *bháoli* system, when payment in kind has been commuted to a money rental, are said to be held *nákdi*. (5) *Bári* lands are the homestead lands held by the peasantry, and consist of those immediately surrounding their dwellings or homesteads. The custom regarding these lands varies in different parts of the *parganá*; but as a general rule all cultivating tenants in a village are permitted to hold a certain area of land as homestead, without payment of rent. The area thus assigned is generally about four to six *kathás*, *parganá* measurement. Where the area exceeds this, rent is charged, though sometimes *rayats* will be found holding *bári* lands of two or three *bighás* in extent. Non-cultivators, or cultivators who are also artisans, requiring land on which to carry on their trade, such as weavers, *mahájans*, and shop-keepers, are not entitled to homestead land free of rent.

"In Palámau, cultivators are divided two broadly-distinguished classes—(1) *khudkásht* or resident *rayats*, (2) *paikásht* or non-resident *rayats*. The rights of the first-named are governed by unwritten custom descending for ages. The giving and taking of *pattás* and *kabuliyats* in Palámau is a custom of rare occurrence, and has been introduced from Behar. As a rule, the cultivators of a village rarely hold their lands on *pattas*. Receipts for rent too are rarely given, while suits for arrears of rent are rarer still. The fact that scarcely 297 suits for arrears of rent have been brought during the past eleven years speaks for itself. The *rayats* have not so much rights of occupancy in any particular field as the right to cultivate in the village at village rates. And this is a right which is never denied by the landlord. It may be that were cultivators more numerous in proportion to the area of available land, their position would not be so secure as it is now; but one thing is certain that, comparing the Palámau cultivator with those of his own status in the adjoining districts of Gayá and Sháhábád, there cannot be a doubt that he is far better off in every way than his neighbours. It is very rare indeed that the Palámau landlord proceeds to oust one of his resident cultivators, or impose upon him an increased rate of rent, without a just reason for so doing; that is to say, if the produce has increased by better irrigation brought about by the landlord having expended capital in making a reservior or raising an embankment, and the increase is so marked that the cultivator has nothing to urge against the increased demand. It is true that the landlord frequently imposes *abwábs* of different kinds, some of them in a measure legalised by long-established custom; but he dare not go any great length in so doing, without running the risk of losing his tenants. Taken as a whole, the Palámau peasant is better housed, clothed, and fed than his Behar neighbour. He is very improvident and often in debt; but there is this difference between him and the *rayat* of Bengal, that whereas he is only the victim of the *mahájan*, the latter is the landlord's also. The Palámau landlords have never admitted a right of occupancy (as defined in Act X of 1859) on the part of their *rayats*, but have always assumed to themselves the right to enhance at will at the end of the year; and it may be fairly argued that, with long-established usage as their guide, they have a perfect right to do so. The law of landlord and tenant, it must be remembered, has never been extended to Lohárdagá district. The local Courts have been simply enjoined to act according to the spirit of the Act, that is to say, in regard to procedure when dealing with rent disputes and to procedure only. There are hundreds of cases, it is true, in which *rayats* have been permitted to hold the same lands for generations. And yet, if dispossessed to-morrow, however hard they might think it, they would accept the situation without remonstrance; but such harsh measures are very rare, and, as a rule, Palámau tenants are treated very leniently by their landlords. The assessment is light, the terms on which they hold their land are easy, and as the population is scant and land is plentiful, the cultivating peasant is too valuable and too easily scared away, or induced to settle on a neighbour's lands, to admit of his being rack-rented.

The insecure position of the Palámau rayats, and the various extortions which, under one name or another, they are continually subjected to by their landlords and farmers, induced the Government to adopt the ráyatwári system at the last settlement of the *deoree* and *khálsá* villages. The main features of the settlement have been already mentioned. The following is a *resumé* of the rights and privileges accorded to the farmer and cultivators, and the duties required of each:—

The *mánjhihas* and *mahátwáná* lands found with the farmer have been settled with him at the village rates. These lands he holds in virtue of his position as farmer or Government rent-collector, for such is his proper position. He cannot acquire any right of occupancy in these lands, his continuance in the village as farmer being dependent on the manner in which he conducts his trust; but at the same time it has been specially declared to him that he need not fear being dispossessed during the currency of the present settlement except for misconduct, and that good management and a liberal outlay of capital, combined with a proper treatment of his rayats, will give him a prior claim at any future settlement. Should he lose his lease, these lands would be made over to his successor. He is bound to give each cultivator in a village settled on the *páriá* system an area of upland equal to the area of low rice land held by him, and of a corresponding quality of soil. The excess uplands being settled with the farmer in a lump, he may lease them to his ryots at whatever rates they may determine upon between themselves. Any sum which he may thus obtain in excess of the two annas rent per bigah he has to pay is his profit, and for any new lands reclaimed from the jungle he is entitled to demand a fair and equitable rent, the entire profit being his

The *bháoli* system extends, as a rule, only to the permanent holdings; outlying lands held He is entitled to demand grazing dues from any outsider whose cattle may come to graze on the village lands, but he cannot demand the tax from his own ráyats. All profits derivable from jungle produce, such as grass, firewood, bamboos, &c., cut by non-residents, belong to him; and in addition to the above, he has received a commission of 10, and in some few cases 15, per cent. on the gross rental to remunerate him for the cost of collection. He is bound to keep in repair the village embankments, but not those which have been erected by the cultivators themselves for their own special benefit. He is prohibited from levying any unauthorized taxes, or from making any demand for rent in excess of the rates, though if by outlay of capital he converts the lands now recorded and assessed as second and third class lands into first class lands, he may sue under the law for enhancement. All *máhuá* trees in excess of those included in the *páriás* have been settled with him at two annas per tree. The profit derivable from these are entirely his, as also the rents payable during the term of his lease by any new cultivator he may induce to settle in the village.

The cultivators have all now been secured in the possession of their tenures, from which they cannot be dispossessed so long as they continue to pay their rents with punctuality. Previous to settlement they had no peculiar rights of occupancy; under the present settlement, they have acquired a right of occupancy under the law.

Among the cultivating tenures should be included the inferior class of service tenures held by various village officials—the *baigá* or aboriginal village priest, the *kotwár* or *goráit* who may be said to be the village messenger, and the chowkidár or police servant. All these service tenures resemble in respect of their incident the corresponding tenures in Chutiá Nágpur Proper.

"TENURES OF PARGANA BELAUNJEH.—*Parganá* Belaunjeh forms a long steep of hilly broken country, varying from ten to twelve miles in width, intervening between Palámau and the Són river, which runs due east and west along the whole of the northern boundary. The District of Mirzápur in the North-Western Provinces forms the extreme western, and the North Koel river the greater part of the eastern boundary. A small portion of the *parganá*, stretching across the Koel river, intervenes between Palámau to the south and *parganá* Japlá to the north. Belaunjeh, which is geographically divided into four minor fiscal divisions or *tappás*, namely, *tappás* Paraudá, Pahári, Deymá and Khayrá, forms an estate belonging to an ancient family of Rájputs. The present Rájá Ridnáth Sáhi claims to be the 56th in descent from Rájá Nar Náráyan, the alleged founder of the family. He does not, however, possess any records which date further back than the time of Rájá Kindra Sáhi, the 50th of the line, who lived about the year 1708 A.D. The family appears to have been the proprietor of *parganás* Japlá and Belaunjeh on the east bank of the Són, and also of *parganás* Hávili, Sarkár Rohtás, Subah Behar, on the west bank of that river. The Mughul Government styled the Rájás the *sole zamíndárs* of these three *parganás*; and in a paper, termed a *taslinamá*, dated 25th of the month of Zilhij of the year 7 Jalús, addressed to Rájá Balbhadra Sáhi, the immediate successor of Rájá Kindra Sáhi abovementioned, the *jamá* of the estate is declared to be Rs 2,459; but whether this is the *jamá* payable on account of the three *parganás*, or only for *parganá* Belaunjeh, is uncertain. The *taslinamá* was as follows:—'Writers of the present and future account of the history of *parganá* Sarkár Rohtás, belonging to *Subah* Behar, are informed that the Rájá Balbhadra Sáhi attended this *dargá*, and petitioned as follows: 'That from a long time the *jamá* of the *táluk* already in his possession is settled at Rs. 2,459; that at present the officers of the Khálsá, on account of his having no *sanad* of *zamíndári* of the aforesaid *dargá*, wish to increase the rent. In reply to his petition, it is hereby ordered that the *málguzári* of his *táluk* shall not be allowed to be increased during his and his successor's times, and the officers must take Rs. 2,459 only and nothing more, because he has to support his family from the income of that *táluká*. He is also exempted from paying other expenses, such as *kánungo*, &c., &c., on account of his being a man of very high family. The aforesaid officers should be particular not to infringe this order.' It would appear from the above that at this time the three *parganás* forming the Rájá's *zamíndári* comprised a revenue. paying estate. For some act of disloyalty, as it would seem, the old Hindu Rájá was dispossessed, and the two *parganás* Belaunjeh and Japlá were afterwards created into an *altamghá* estate by one of the Mughul kings of Delhi, in favour of the ancestor of the present Nawábí family of the latter *parganá*. The Rájás fought every inch of the ground to keep their patrimony; and the Nawábs succeeded only in getting actual possession of Japlá, and of that portion of Belaunjeh mentioned below as lying on the east bank of the Koel. The Nawábs eventually relinquished their rights in Belaunjeh to the British Government; and the Settlement was made with the Rájás as *mukarraridárs*, the whole of the revenue assessed (Rs. 7,883-12) being paid at the present day to the various representatives of the Nawábí family, under the name of *málikáná*, a term properly applicable to the allowance awarded to a dispossessed proprietor.

"The principal subordinate tenures in Belaunjeh consist of maintenance *jágirs*, service grants, *mukarraris* and other *istimrári* hereditary tenures, both rent-paying and rent-free, similar to those found in Palámau. The peasantry of the *parganá* hold their lands, as a rule, on the *bháoli* system previously described. Both the *dánábandi* and the *battayá* modes of collecting the rent in kind are employed, but the two methods never prevail in the same village together. temporarily, such as jungle *tánr* lands, are usually held on the *nakdi* or cash system. In a few villages only is the *nakdi* system found throughout. *Pattás* are, as a rule, given for lands

the rent of which is collected in cash. In the case of newly broken-up jungle land held on the *bháoli* system, the proportion of the produce exacted by the landlord is not, as a rule, one-half, as has been shown to be the case in old lands. In such cases the landlord, in consideration of the labour and expense which the cultivator has to incur in order to bring the land into a proper state of cultivation, sometimes exacts no rent for the first two or three years; and after that the *rayat* has to give a fourth of the produce, and so on by gradual increments until he can fairly afford the usual quota of one-half. The same consideration is shown to new settlers, where the rent is paid in money. This custom prevails also in Palámau, where new settlers are treated with every consideration, both in regard to the terms on which they hold their land and the assistance given them in the shape of money, grain, and plough cattle.

"TENURES OF PARGANA JAPLA.—*Parganá* Japlá formerly belonged, with *parganá* Belaunjeh mentioned above, to the Rájás of Sónpurá. It was granted by Muhammad Sháh, king of Dehli, as a royal *altamghá* grant to Amtulzohra Begam, wife of Nawáb Hidáyat Ali Khán, in the hands of whose descendants it has remained ever since. On the death of the Begam, her eldest son, Ghulám Husáin Khán, author of the *Siyar-ul-mutakharin*, succeeded; and his second son, Takhyali Khán, *alias* Farakul Daulá, obtained a similar grant of *parganá* Belaunjeh. The Rájá did not submit quietly to this summary ejectment by royal *farmán*, and it was only after a long and protracted struggle that the Nawábs succeeded in securing peaceful possession of Japlá. The struggle for the possession of Belaunjeh was protracted for a much longer period, and finally terminated in the compromise which has been described in the account of the Land-Tenures of that *parganá* on the preceding page. The Nawábi family of Japlá is now almost extinct, more than three-fourths of the estate being held by aliens, the greater number of whom pay no rent. The lands are almost all held on the *dánábandi* and *battayá* forms of the *bháoli* system, by which the rent is collected in kind. In fact, the system is exactly identical with that which prevails in the neighbouring *parganá* of Belaunjeh. As Japlá forms a Muhammadan estate, there are no extensive Hindu rent-free tenures, though there are many petty rent-free holdings granted by Rájput landlords. The chief rent-free tenures are those granted by the Nawábs, of which the following is a list:—(1) *Mussajia*, guardianship of mosques; (2) *mukábir*, guardianship of ceremonies; (3) *wakf*, or charitable bequests; and (4) *niáz-i-daryáh*, or grants to particular shrines. All these are obviously of Muhammadan origin."

CHAPTER V.—*Communications.*

Boat-routes.—The river Son forming the northern boundary of the sub-division is navigable during the monsoon and for two or three months after its close. During this period a brisk traffic in country and foreign produce is kept up by means of large native boats. The North Koel, a tributary of the Són, is also navigable during the rains and for the next two or three months by light boats up to the village of Sigsigi, where it is traversed by a rocky ridge which prevents navigation further upwards. But for this obstruction, which is said to be easily removeable, the river would be navigable for 70 miles from its junction with the Són up to its junction with the Aurungá. During the rainy season the navigation of the river is not at all safe owing to the sudden and heavy freshets which frequently take place. The river may be almost dry in the morning, and three hours later, owing to heavy rain in the South, the water roars down in huge waves that may swamp any native boat. The traffic in the North Koel consists entirely of coal conveyed down the river from the Singrá mine, which is owned and worked by Messrs. Hodges and Radford of Dehree. The coal mine of Singrá is situated at the confluence of the Koel and the Ámánat. The coal is conveyed in boats of about 200 maunds burthen for use in Mr. Hodges and Radford's workshop at Dehree on the Són. In 1886, 195 boats are said to have been employed by the Company for the conveyance of coal from Singrá to Dehree.

The river trade of Palámau is, however, quite insignificant as compared with the total bulk of its trade. Leaving the two unimportant exceptions of the Son and the Koel in the extreme north, there is no river, not to speak of canals, throughout the sub-division which serves any other purpose than that of carrying away the drainage of the country.

There are no railways in the Palámau sub-division. The nearest railway station is Gayá, on the Patna-Gya State Railway, 128 miles from Daltonganj. Proposals have been afloat for a long time for connecting the Palámau coal fields in the valleys of the Koel and the Ámánat with the East Indian Railway by means of a branch line of railway. One of the alignments of the proposed Benares-Cuttack Railway is, I believe, taken through the Palámau coal-fields.

The following table shows the name, situation and milcage of the existing roads and country tracts of the sub-division. These are classified as under:—

I. Roads above high flood level, metalled and bridged, or having ferries.
II. The same, but unmetalled.
III. The same, but with temporary bridges.
IV. Low level roads—above ordinary and under high flood level.
V. Surface tracks.

There are no roads belonging to the first two classes in the Palámau sub-division. The roads are all of them under the management of the District Road Committee.

Roads under the District Road Committee in the sub-division of Palámau.

Number of roads.	From	To	Length in miles.	Class.	REMARKS.
1	Aurangá river, the boundary between the Sudder and Palámau subdivisions.	Daltonganj ...	48	III	This road is known as the Ránchi road. It is frequented by a large number of pack-bullocks and also a few carts. It is the highway between Ránchi and Lohárdaggá on the one hand and Daltonganj, Gárwá and important marts in Gayá on the other. It passes through Mánki, Latehár and Sátbarwá, all important markets. The road is passable during the fair weather, but during the rains cart traffic is impossible owing to floods in the numerous streams which have to be crossed. Only two of these have been bridged. The road is very important, and should be made passable all round the year.
2	Daltonganj ...	Mahárájganj on the boundary between Palámau and Gayá.	43⅜	III	This is known as the Mahárájganj road *viâ* Nowá and Chittarpur. There is brisk traffic on this road by carts and pack-bullocks. Cart traffic is suspended during the rainy season on account of various river crossings, the most important being that of the Ámánat, a few miles north of Daltonganj. This road is continued to meet the Grand Trunk road at Arangábád in Gayá.
3	Ditto ...	Gárwá ...	18⅝	III	This is known as the Gárwá road. In point of traffic it is the most important road in Palámau, as connecting Gárwá, the largest mart in the district with Ránchi, Daltonganj, Lohárdagá, and various important marts in Gayá.
4	Gárwá ...	Majhewán ...	11	III	There is a brisk traffic by pack-bullocks at all times of the year, and by a large number of carts during the fair weather, between Japlá and Sháhábád on the one hand and Gárwá on the other.
5	Majhewán ...	*Viâ* Hosseinábád to Budhuá Ghât on the Son.	20	III	
6	Gárwá ...	Untári ...	26	III	This is a continuation of the Gárwá road, but is little better than a surface track. Very little traffic is seen on this road. There are tracts connecting this road with Mirzápur and Sháhabad.
7	Daltonganj ...	Boundary of the district towards Sherghátti in Gayá.	34	III	This road passes through Lesliganj, Tarhási and Monátu and Padmá. Only 15 miles of it are properly made; the remainder, a mere surface track, over hilly and jungly ground. It was intended to connect Palámau with Sherghátti in Gayá and to serve as an outlet for the cotton grown in Palámau. Formerly there was a pretty large traffic on this road, but latterly it has fallen into disuse owing to the opening of the Mahárájganj road.
8	Lesliganj ...	Pánki ...	17½	III	Not an important road at all. It was undertaken, I believe, as a relief work during 1874.
9	Daltonganj ...	Paton ...	13¾	III	This connects Paton police station with Daltonganj. There is a track over a ridge of hills between Paton and Chittarpur which, together with the Paton road, forms a short cut between Daltonganj and Chittarpur on the Mahárájganj road, and is largely availed of by foot passengers.
10	Pánki ...	Janju ...	12	V	
11	Cháinpur ...	Rámkundá ...	16	V	
12	Ditto ...	Ránká ...	12	V	
13	Pánki ...	Gárwá ...	12	V	
14	Untári ...	Majhewán ...	25	V	
15	Chittarpur ...	Hosseinábád ...	18	V	
16	Katku .	Rámkundá ...	15	V	

Cart traffic is suspended during the rainy season on account of the rivers and streams over which the roads pass being more or less in a state of flood; and even traffic by pack-bullocks is greatly impeded thereby. The main lines of external communication are:—

(1) The Ránchí road.
(2) The Mahárájganj road leading to Gayá.
(3) The Behar road leading to Gayá.
(4) The Gárwá-Hosseinábád road leading to Sháhabád.
(5) The Untári road leading to Mirzápur in the North-Western Provinces.

Of these the first, second, and the fourth command the largest amount of traffic, and ought to be made passable all times as soon as funds will allow. As regards the extension and improvement of communications, I need not reproduce the remarks I made in this connection in Part I of this Report (p. 117).

CHAPTER VI.

TRADE AND COMMERCE.

Internal Trade.—I have described at length in Part I of this report the usual media through which the internal trade of the Chutiá Nágpur sub-division is carried on. The same description applies equally to the trade transactions of the Palámau sub-division.

Exports and Imports.—No trustworthy statistics of the export and import trade of the sub-division exist. Eight registering circles have been recently established in the Palámau sub-division, namely, Gárwá, Hariharganj, Hosseinábád, Pánki, Latehár, Manátu, Máhuádánr, and Untári. The following are the statistics of export and import which were collected in these circles in the year 1888-89:—

Statement showing the Export of the Registering Circles in the district of Lohardaga during 1888-89.

NAME OF REGISTERING CIRCLE.	Rice.	Dál.	Wheat.	Barley.	Surguja.	Til.	Mahua.	Urid.	Sarsoo.	Ghee.	Gur.	Tobacco.	Salt.	Hide.	Lac.	Catechu.	Tusser cocoon.	Cloth.	Gram.	Castor seed.	Honey.
Palámau Sub-division.	Mds.	Mds.	Mds.	Mds.	Mds.	Mds.	Mds.	Mds.	Mds.	Mds.	Mds.	Mds.	Mds.	Mds.	Mds.	Mds.		Piece.	Mds.	Mds.	Mds.
Gárwá	3,375	615	1,520	943	95	1,700	2,242	252	4,693	3,480	2,730	1,240	3,850	525	3,615	339	370	2,902	1,200	236	8
Hariharganj	1,569	676	1,020	366	...	909	2,299	355	761	1,332	1,729	818	1,449	100	...	...	...	958	1,468	252	2
Hosseinábád	153	101	667	677	175	69	2,786	33	846	1,017	267	257	456	1,325	194	454	685	1,088	433	564	54
Pánki	107	...	...	...	...	38	74	21	19	37	...	...	...	...	122	...	...	...	...	20	...
Latehár	613	195	116	59	23	17	641	64	53	46	4	...	10	...	50	...	...	...	40	10	...
Manátu	180	10	517	2	203	167	952	15	413	342	...	...	...	...	4,182	...	37	...	...	39	...
Máhuádánr	107	...	7	...	497	...	...	...	306	9	25	41	37	...	10	...	...	...	...	...	...
Untári	189	...	22	54	...	455	1,039	3	879	318	30	...	36	...	...	...	...	...	...	...	...
Total ...	6,284	1,597	3,869	2,101	993	3,355	10,033	743	7,960	6,580	4,185	2,356	5,858	1,950	8,203	783	1,092	4,945	3,101	1,131	64

NAME OF REGISTERING CIRCLE.	Horns.	Makai.	Blankets.	Iron.	Coal.	Refined sugar.	Sugarcandy.	Brass utensils.	Cocoanuts.	Cotton (kapas.)	Wool.	Sabey grass.	Horses.	Buffaloes.	Bullocks.	Oxen or cows.	Sheep.	Goats.	Tissee.	Oil.	Spices.
Palámau Sub-division.	Mds.	Mds.	No.	Mds.	Mds.	Mds.	Mds.	Mds.	No.	Mds.	Mds.	Mds.	No.	No.	No.	No.	No.	No.	Mds.	Mds.	Mds.
Gárwá	316	1,805	2,025	995	...	1,886	13	459	280	511	...	552	25	159	380	...	26	622	78	...	449
Hariharganj	...	409	46	18	...	10	...	...	...	309	...	100	...	...	...	...	...	...	1,476	...	...
Hosseinábád	1,896	135	408	5	21,900	159	...	453	434	438	...	388	...	...	150	...	...	...	11,352	92	37
Pánki	...	72	...	...	...	...	...	...	...	56	...	...	...	...	...	...	...	...	...	...	...
Latehár	13	59	16	...	...	...	...	...	...	12	...	31	...	...	422	...	2	...	...	...	...
Manátu	...	677	95	151	...	...	...	...	...	...	...	...	2	...	...	...	...	...	...	...	...
Máhuádánr	...	246	...	20	...	...	...	...	...	64	...	...	...	...	...	...	16	4	...	...	11
Untári	...	15	...	...	18	...	...	...	17	27	...	30	...	...	...	...	...	...	268	67	...
Total ...	2,214	3,411	2,522	1,195	21,918	2,049	13	892	731	1,417	...	1,601	27	159	954	...	45	626	13,174	159	407

Statement showing the Import at the Registering Circles in the district of Lohardaga during 1888-89.

NAME OF REGISTERING CIRCLE.	Rice.	Dál.	Wheat.	Barley.	Surguja.	Til.	Mahua.	Urid.	Sarsoo.	Ghee.	Gur.	Tobacco.	Salt.	Hide.	Lac.	Catechu.	Tusser cocoon.	Cloth.	Gram.	Castor seed.	Honey.
Palámau sub-division.	Mds.	Mds.	Mds.	Mds.	Mds.	Mds.	Mds.	Mds.	Mds.	Mds.	Mds.	Mds.	Mds.	Mds.	Mds.	Mds.		Piece.	Mds.	Mds.	Mds.
Gárwá	4,260	807	1,985	964	77	1,419	2,751	281	4,988	3,365	4,012	2,170	4,642	925	4,116	747	216	6,101	1,627	230	10
Hariharganj	2,998	1,543	1,946	701	...	864	2,977	386	1,410	1,228	1,826	1,955	4,937	395	...	...	...	3,351	2,412	430	47
Hosseinábád	819	210	526	602	30	527	420	...	65	141	3,411	1,807	1,461	586	28	30	40	715	310	348	80
Pánki	71	...	...	...	...	24	42	20	11	15	...	56	44	...	...	21	...	50	...	...	...
Latehár	167	32	108	18	13	24	13	...	21	98	95	35	89	...	3	...	...	280	133	10	...
Manátu	143	...	...	...	...	...	...	...	...	...	...	1,803	1,179	...	...	...	...	122	...	...	...
Máhuádánr	117	...	...	...	119	...	...	...	54	...	...	111	412	62	...	...	...	219	...	...	...
Untári	204	...	15	...	...	167	425	30	410	54	1,174	538	900	...	...	...	...	...	875	...	...
Total ...	8,779	2,592	4,580	2,345	239	3,025	6,634	607	6,959	4,901	10,518	7,975	13,754	1,968	4,147	798	256	10,818	5,428	1,018	137

Statement showing the Import at the Registering Circles in the district of Lohardaga during 1888-89.

Name of Registering Circle.	Horse.	Makai.	Blankets.	Iron.	Coal.	Refined sugar.	Sugarcandy.	Brass utensils.	Cocoanuts.	Cotton (kapas).	Wool.	Sabey grass.	Horses.	Buffaloes.	Bullocks.	Oxen or cows.	Sheep.	Goats.	Tissee.	Oil.	Spices.
Palámau sub-division.	Mds.	Mds.	No.	Mds.	Mds.	Mds.	Mds.	Mds.	No.	Mds.	Mds.	Mds.	No.	No.	No.	No.	No.	No.	Mds.	Mds.	Mds.
Gárwá	436	976	3,904	1,309	25	584	11	735	1,450	1,299	...	162	31	1	892	...	28	75	85	...	377
Harlharganj	627	85	317	232	..	275	...	455	460	1,253	...	240	...	...	...	...	...	...	10,896	...	79
Hosseinábád	509	...	972	50	...	523	...	446	677	109	...	28	...	...	...	...	...	40	...	...	89
Pánki	...	40	...	...	...	...	...	...	18	9	...	...	...	...	...	...	...	...	...	...	...
Latehár	...	20	...	...	...	19	...	...	...	...	...	...	...	...	...	...	...	...	...	...	27
Mánátu	...	...	...	...	...	...	...	...	...	...	...	...	...	...	...	...	...	24	...	...	86
Mahuádánr	...	41	43	15	...	15	...	200	...	...	...	...	1	15	100	...	...	...	...	...	48
Untári	...	...	73	46	...	51	...	56	...	22	...	...	4	...	...	...	...	...	39	269	...
Total ...	1,572	1,168	5,308	1,712	25	1,467	11	1,892	2,605	2,692	...	430	36	16	992	...	28	139	11,020	269	706

But for reasons which I adduced while dealing with similar statistics for the Sudder sub-division (page 119, Part I), the statistics exhibited in the above statements would appear to condemn themselves, and, being misleading, should be considered as worse than useless. The principles on which the registration is made, and the agency employed in the work, are very defective, and the former ought to be corrected, or, rather, explained fully to the registering officers who appear to me to have a very imperfect idea of the nature and object of trade registration.

Some statistics of export and import which were collected by Mr. Forbes in 1872, and published in his report on the Palámau sub-division, appear to me to be more deserving of credence. They are accordingly given in the following statements:—

Exports.

Articles.	Quantity and average rate.	To where exported.	Gross value in rupees.
Blankets	3,000 at Rs. 1-4 each ...	Sirgoojah, Lohardaga, and Hazareebaugh.	3,500
Catechu	4,000 mds. @ „ 3-8 ...	Behar	14,000
Cattle (bullocks)	4,000 „ @ „ 10 per head	Chuttra in Házáribágh	40,000
Ghee	15,800 „ @ „ 12 ...	Benares, Behar, and Calcutta ...	1,89,600
Cloth (Native)	... .	Sirgoojah	2,000
Cotton (raw)	28,000 „ @ „ 4 ...	Behar and Mirzapore	1,12,000
Gram	15,000 „ @ „ 1-4 ...	Lohardaggah and Házáribágh ...	18,750
Hides, whole or made in koopahs	15,000 „ @ „ 25 per score	Benares and Calcutta	3,750
Honey	150 „ @ „ 4 ...	Ditto and Mirzapore	600
Iron	2,000 „ @ „ 2-12 ...	....	5,500
Lac, stick and seed	3,000 „ @ „ 7 ...	Mirzapore, Behar, Lohardaga, and Házáribágh.	21,000
Lodh	100 „ @ „ 1 ..	Mirzápore	100
Mowha	10,000 „ @ „ 0-8 ...	Behar	5,000
Resin	3,000 „ @ „ 3 ...	Do. and Mirzápore...	9,000
Sheep	3,000 „ @ „ 35 per score	Lohardaga and Házáribágh ...	5,250
Tussor cocoon	1,800,000 „ @ „ 5 per mille	Behar	9,000
Sugar (raw)	500 „ @ „ 2-8 ...	Surguja	1,500
Til (oil-seed)	160,000 „ @ „ 1 ...	Mirzápore and Behar	1,60,000
Wheat	5,000 „ @ „ 2 ...	....	10,000
Jungle produce (drugs, roots, and dyes) ...	....	....	15,000
Bamboos	700,000 „ @ „ 6 per mille	Shahabád and Patna	4,200
Sugar rollers of koosum wood	15,000 „ @ „ 8 each ...	Behar	3,000
Tikhoor (arrowroot)	300 „ @ „ 8 ...	Do. and Házáribágh	2,000
		Total ...	6,32,750

Imports.

Articles.	Quantity and average rates.	From where imported.	Gross value in rupees.	Remarks.
Blankets	5,000 @ Re. 1 ...	Arrah	5,000	The maund here given is the kutcha maund of 48 kutcha seers, equal to 37 seers pucca bazar weight; one kutcha seer equals 2 chittacks pucca bazar weight.
Cloth (Europe)	....	Calcutta	30,000	
Do. (Native)	....	Behar and Benares	25,000	
Metal (cooking utensils)	....	Chuttra and Mirzápore ...	12,000	
Oil-seed (mustard)	3,000 mds. @ Rs. 2-4 ...	Sirgoojah and ditto	7,500	
Rice	1,65,000 „ @ „ 1-8 ...	Lohardaga and Behar ...	2,47,500	
Spices	200 „ @ „ 20 ...	Behar	4,000	
Sugar { manufactured (cheenee)	5,000 „ @ „ 13 ...	Ditto	65,000	
Sugar { raw (goor)	4,000 „ @ „ 2-8 ...		10,000	
Tobacco leaf	2,000 „ @ „ 3-8 ...	Ditto and Tirhoot	7,000	
Ditto prepared	500 „ @ „ 5 ...		2,500	
Salt	31,270 „ @ „ 4-4 ...	Lohardaga and Hazaribagh.	1,32,870	
		Total ...	5,48,370	

The above statements do not include the through trade which passes through the Palámau sub-division. The trade between Chutiá Nágpur Proper and Behar and between the Tributary State of Sarguzá on the one side and Chutiá Nágpur Proper, Behar and Házáribágh on the other, is carried on by Palámau merchants. The through trade consists mostly in the export of rice from Chutiá Nágpur Proper to Behar, of cattle, ghee, cotton, hides, lac and honey from Sarguzá to Behar, and in the import into the former from the latter of European and native cloth, sugar, tobacco and metal utensils. The total through trade was estimated by Mr. Forbes to have an annual value of Rs. 2,30,000.

The chief articles of export to Behar are cotton, oilseeds, *ghee*, *máhuá*, *tasar* cocoons, lac, *sábái* grass, wool and blankets, hides and cattle; and the export southwards to Chutiá Nágpur Proper consists mainly of wheat, barley, gram, *máhuá* and ghee. The value of the exports in cotton was estimated by Mr. Forbes at Rs. 1,12,000: the export, according to the statistics recently collected, appears to be, however, quite insignificant. Although much of the cotton exported must have escaped registration, there can be no doubt that the cultivation of this staple has largely declined in recent years, and thus caused a corresponding decline in its exports.

The exports in oilseeds consist mainly of *til* and linseed, and to a less extent of mustard, castor-seed and *sarguzá*. The trade in *ghee* is very considerable. The western tuppehs of the Palámau sub-division and the neighbouring Tributary State of Sarguzá are a vast grazing ground, on which extensive herds of buffaloes and cows are pastured. The *áhirs* or herdsmen take advances from *mahájans*, to whom they bind themselves to deliver the produce of *ghee* at stipulated rates. The trade in ghee appears to me to be capable of great development, but the imperfect nature of the existing communications between the outlying parts of the sub-division and its principal markets interferes with its proper expansion. There is also a brisk export trade in bullocks and buffaloes. The bullocks find their way to Házáribágh and the buffaloes to Chutiá Nágpur Proper.

The rearing of *tasar* cocoons has recently received an impetus from some English firms and the competition which has naturally grown between them and the native *mahájans*. Formerly the best part of the profits of the industry used to be appropriated by the *mahájans* to whom the rearers were indebted, and consequently bound to deliver their produce. The English firms also make advances, but their terms are much less exacting than those of the native dealers.

The export trade in lac is very important. The rearing of lac on *parás* trees (*Butea frondosa*) is carried on in every village in Palámau, although regular plantations of these trees as are met with in the Gayá district are not to be seen anywhere in Palámau. The lac is exported to Chutiá Nágpur Proper where there are several shell-lac factories and to Mirzápur. Messrs. Jardine, Skinner and Company of Calcutta have several depôts in Palámau, where lac is collected for export to their factory at Mirzápur.

The coals exported from Palámau are derived entirely from the mine at Singrá, owned and worked by Messrs. Hodges and Radford. They are exported to Dehree on the Son for use in their steamers and in the Dehree Government workshops. During the rainy season the coal is conveyed in boats down the Koel and the Son to Dehree, and in the dry season it has to be transported by carts over a road that is by no means good to Baroon *viá* Hariharganj, a distance of 65 miles. With a good metalled road between Singrá and Baroon on the Grand Trunk Road, the cost of conveyance may be materially reduced. The traffic in coal amounted to 1,35,000 maunds in 1885 and 1,65,000 maunds in 1886.

The chief imports to the Palámau sub-division are rice from Chutiá Nágpur Proper, European and Native piece-goods, and salt from Calcutta, and sugar, tobacoo and metal utensils from Behar and Házáribágh. The export and import trade with Calcutta is carried on mainly through Chátrá in Házáribágh, Sasseram in Sháhabád, and Gayá.

Markets and Fairs.—There are forty-three weekly markets in Palámau according to Mr. Forbes. The chief among them is the market of Gárwá, which is believed to be the largest mart in Chutiá Nágpur. It is held once a

week, but lasts for two and sometimes for three days. The trade of this market is almost entirely carried on by means of pack-bullocks, of which as many as 4,000 come every week to Gárwá during the dry season. A few carts come from Behar *viá* Hosseinábád and Májhewán. During the rainy season communication becomes exceedingly difficult, and the market is practically deserted. Gárwá is the principal seat of exchange between the exports and imports of the Palámau sub-division and of the Tributary State of Sarguzá.

In each market there is a *chaudhuri*, who is authorized by the owner of the market to weigh all the bulky goods, such as rice and other grains, lac, ghee, &c., and is entitled in return to a certain percentage on the weighments made.

The only fair of any importance in the Palámau sub-division is that of Daltonganj, which is held in the month of February. The fair was established in 1873 with a view to give a real impetus to the trade by bringing in foreign traders and buyers and breaking up the monopoly of the local traders. It is estimated that goods to the value of about Rs. 20,000 are sold annually at the fair. These consist mainly of piece-goods and metal utensils. Very little of the ordinary country produce is brought to the fair for sale.

Trade in fish.—The supply of fish in the Palámau sub-division is extremely scanty, and there is no trade in it.

CHAPTER VII.

Manufactures, Arts and Industries.

There are no manufactures of importance in the Palámau sub-division. Though some of the Thaterás make a few brass utensils, most of these come to the sub-division from Mirzápur and Benares. Strong and rude country cloth is made in the sub-division by a caste of Mahomedans known as Jellahars.

Besides the cultivation of land, there are three other important industries in the Palámau sub-division, viz., the manufacture of ghee, which has been described in section 9, Chapter III of this part of the report, the rearing of *tasar* silkworm, and the growing of lac.

The rearing of tasar silkworm.—Formerly the whole of the right to the *koá* or silk revenue of Palámau was in the hands of Government as the proprietor of the parganá, but several tenure-holders claimed and now enjoy the right to this revenue. In those forests in which the zamindárs retain the right to the *koá* revenue, the tax levied on each *hánsuá* (or sickle for cutting the twigs of the breeding trees), which represents a family, is Rs. 3-8. Of this amount, Re. 1 is paid as *salámi* or fine, and the balance, Rs. 2-8, as *pátkar*, which is the tax paid for the right to rear the worms. The *pátkar* is not paid if the crop of cocoons fails through disease in the worms. In those forests in which the Government possesses the right to the *koá*, the latter is leased out to farmers in consideration of a yearly rent. Mr. Hodges is the present farmer and pays Rs. 1,000 as rent for the *koá* farm. He levies *pátkar* at the rate of Rs. 4 per *hánsuá*; besides the owner is entitled to Re. 1 as *khuntkar*, that is, the tax for the right of cutting the trees. "Mr. Forbes estimated the number of *hánsuás* in the sub-division at 2,000, each *hánsuá* representing a yearly outturn of 5,500 cocoons. Taking the number of cocoons that go to the maund at 3,400, as computed by Mr. Deveria of Rániganj, the annual yield of cocoons in the entire sub-division of Palámau would amount to 3,190 maunds."

The rearing of silkworms is carried on only in the jungly parts of the sub-division. It is mostly in the hands of the following castes:—Cheros, Kherwárs, Uráons, Bhuiyás, Chámárs, Dosádhs, Málás and Ghásis. People of good Hindu castes would never think of being employed in this work. The rearers of *jivanyás* are mostly poor people, and are consequently obliged to take advances from *mahájans*. The usual custom is for the latter to advance money or grain at *dehrá* or 50 per cent. interest, both capital and interest being paid in cocoons. Within the last few years, several English firms have opened business in the Palámau sub-division. They give advances to the rearers who bind themselves to deliver cocoons at Rs. 5 per *khári* (a *khári* =1,200) up to the value of the loans, to sell the surplus to the firms at the prevailing market rates, and to make good the advances within five years, after which the outstanding balance of the advances will bear interest. The usual market price of cocoons varies from Rs. 7 to Rs. 8 per *khári*.

The method of rearing the worms is the same in the Palámau and Chutiá Nágpur sub-divisions. In Palámau the seed cocoons for the September harvest are always preserved from the preceding November harvest, and are never collected in the jungles, as is done in Chutiá Nágpur Proper. The best and biggest cocoons of the November crop are selected for seed; during winter they are kept carefully packed up in baskets made of leaves, which are hung to the roof of the house. In the hot weather the baskets are kept in a cool place in the day time, and exposed on the roof to cool in the night. In July, after the rains have set in, the cocoons are taken out and threaded one by one to the roof. The subsequent life history of the insects and the method of rearing them is exactly the same in Palámau as has been already described under Chutiá Nágpur in pages 123-124, Part I. The entire crop of cocoons obtained in September is reserved as seed for the succeeding November harvest. A *jivaniyá* may obtain from 10 to 20 *kháris* of cocoons by employing himself and 4 or 5 of his dependents. In certain years, however, the insects die off wholesale, and the outturn may be absolutely nil.

Lac.—Lac is grown in almost every village in Palámau. The lacworm is reared on the *parás* trees (*Butea frondosa*), which are found scattered about in the village uplands. No attempt has been made, as in South Gayá, to make regular plantations of these trees. There are few *kusum* trees (*Sleicheria trijuga*) which yield the best kind of lac.

There are no shell lac factories in Palámau, and the whole of the lac produced in the sub-division is exported to Chutiá Nágpur Proper and Mirzápur.

CHAPTER VIII.

Famine.

Liability to famine.—The sub-division of Palámau resembles South Behar in respect of its climate and agricultural aspects, and is, like the latter, liable to frequent visitations of scarcity and famine. The records of the subdivisional office were burnt down by the mutineers in 1857, and consequently we have no authentic information of any famine that might have occurred before the Mutiny. Since 1857 the subdivision has been thrice visited by famine—in 1859-60, in 1868-69, and in 1873-74.

The famine of 1859-60.—The records we possess of this famine are very scanty.

The great famine of 1866, which devastated the neighbouring province of Orissa did not seriously affect Palámau. The maximum prices of the year were—best rice 9 seers 12 chittacks, coarse rice 10 seers 10 chittacks, and coarse unhusked rice 21 seers and 4 chittacks for the rupee. The high prices ruling in the year are believed to have been caused rather by an increased demand for exportation to other districts than by any serious failure of the crops.

The famine of 1868-69.—The parts of the subdivision that appear to have most been affected by the famine were Deogán and Chittarpur in the north-east and a large tract of country in the north-west, including Untári, Gowál and the north-western portion of Ránká. In the central tuppehs of Kote, Imlí, Pundág, Táliá and the northern half of Bári it was less severe. In the southern half of Bári and in all the southern and south-eastern tuppehs the crops fared much better, while in the valley of Chechári, in the extreme south of the subdivision, an abundant harvest of paddy was reported to have been reaped.

The northern parganás of Belaunjeh and Japlá had not yet been annexed from the district of Gayá; consequently no information was available in the sub-divisional records regarding the extent of the famine of 1868-69 in these parganás. But it is certain that the famine must have been as severe in these parts as in the north-east and north-west of the Palámau sub-division as it was then formed.

In the affected tracts the *bhadoi* harvest of 1868 had almost entirely failed in the north-east and the north-west of the subdivision, and in the central tuppehs half of it had been lost. No reasons were assigned at the time for the loss of the *bhadoi* crops. The paddy harvest fared even worse. On the 9th September 1868,

the Assistant Commissioner of Palámau, Mr. L. R. Forbes, reported that no rain had fallen for some time north of Mánká, excepting a very partial shower which did little good. About this time the prospects of the rice crop were reported to be only 2 annas in the north eastern and north-western tuppehs, and about 8 annas in the central. On the 24th of November following, the Assistant Commissioner reported the almost entire absence of rain since September, and the consequent total failure of the paddy crop over most parts of the sub-division. Regarding the cold weather crops, he reported that wheat, barley, linseed and lentils had entirely failed, that *khesári* could not be sown on account of the dryness of paddy-fields, and about half the usual area under gram was sown, but that the crop came up very scantily. I could not find any later reports regarding the condition of the *rabi* crops of 1868-69.

Relief works appear to have been opened as early as October. On the 6th of that month the Government of Bengal sanctioned a Provincial grant of Rs. 4,800 to be expended on the following works:—Gárwá-Untári road (known as the Untári road) Rs. 1,800, Daltonganj-Mahárájganj road (known as the Mahárájganj road) Rs. 2,100, and Gárwá-Khujri road Rs. 900. Shortly after the following roads were also added to the list of relief works:—

Daltonganj station roads.
Daltonganj-Chándwá road (known as the Ránchí road).
Daltonganj-Behar road (known as the Behar road).
Daltonganj-Gárwá road (known as the Gárwá road).

The number of persons relieved on each of these works during the period from December 1868 to October 1869 is shown in the following statement:—

Statement showing the daily average number of persons relieved for each month during the famine in each of the relief works.

Name of relief work.	December 1868.	January 1869.	February 1869.	March 1869.	April 1869.	May 1869.	June 1869.	July 1869.	August 1869.	September 1869.	October 1869.	Date of closing.
1. Daltonganj station roads.	350	Information not available.	372	367½	248½	291	361	221	132	196	42	15th October
2. Ránchi road	114		303	519	439½	494	521	153	.....	.....	.....	Third week of July.
3. Behar road	84		267	816½	695	879	932	173	19	46	3	Second week of October.
4. Mahárájganj road ...	.....		1,084	1,508½	1,453½	1,505	1,360	384	18	.....	.....	Second week of August.
5. Gárwá road	50		433	1,104½	853	442	324	85	21	.....	.....	Third week of August.
6. Gárwá-Khujri road	.....		110	337	250½	225	319	305	147	94	96	15th October.
7. Untári road ...	.....		242	1,002	1,206½	976	1,809	766	129	80	66	15th "
Total ...	598		2,811	5,682	5,148	4,812	5,020	2,087	466	416	207	

The average daily number of persons relieved during any week rose to its maximum (6,357) in the fourth week of June. In the following week there was a heavy downpour of rain, which caused the number to fall at once to 4,384 by calling away a large number of able-bodied labourers to the field. Since this time the number of labourers on the relief works gradually dwindled till the 15th of October, when such of the works as still remained open were closed.

Comparatively few persons were relieved on the Ránchí, Gárwá and Daltonganj station roads. The Ránchí road passed through the south-eastern tuppehs, where the loss of harvest had not been so severe as in the north: the relief work on this road was closed the earliest of all. The central tuppehs, giving employment on the Gárwá and Daltonganj station roads, and also portions of the Behar and Mahárájganj roads, appear to have been affected in an intermediate degree between the south-eastern tuppehs and those lying to the north-east and north-west. These latter were traversed by the Behar and Mahárájganj roads in the north-east and the Untári road in the north-west. These roads show the largest number of relief labourers.

The relief of 1868-69 was characterised by the extraordinary proportion of women and children employed on the relief works as compared with that of able-bodied men. The percentage of men and the total number of persons relieved was 40·4 in February. From this it fell to 31·4 in March, and again rose to 34·6 in April. Since April it declined gradually till September, when it was only 13·1, against 86·9 per cent. of women and children. The extremely low proportion of men on the relief works must be due to the

able-bodied among them having been called away to agricultural occupation, and leaving the women and children, who were of little use for field work, to be supported by the State.

The rate of daily relief wages were—for men, 6 to 9 Gorakhpuri pice each ; for women, 4 to 5 pice ; and for children, 2 to 3 pice.

The total expenditure incurred by the State in relief works was Rs. 55,497-13-2. Of this amount, Rs. 24,083-13-2 was granted by Government out of the Provincial Fund, and the remainder out of the District Fund.

It was proposed in the beginning to take in hand several irrigation works for the purposes of relief. The Bengal Government sanctioned an allotment of Rs. 1,000 for each irrigation tank or embankment that would be made. The proposal was, however, subsequently given up, as the authorities anticipated some difficulties in the management and supervision of the works. The grounds of difficulty were described by Mr. Forbes in a letter, dated the 1st May 1869. He says:—"Captain Smyth, the officer of the Irrigation Department deputed to Palámau, is of opinion that petty irrigation works would not pay under supervision with an establishment, and therefore the zamindárs must undertake them. If carried out under supervision, it would be unfair to saddle the zamindár with cost of supervision, and if the zamindárs were to undertake them, they could not get full return for the money from the ordinary labourers who had to be relieved ; consequently they would only entertain the *Nuniahs*, and thereby defeat the main and immediate objects of the loans given to them. The only practicable plan would be to carry on the works under paid supervision, and on their completion to measure out the work done and charge the zamindár with cost of the work calculated at established rates."

The Famine of 1873-74.—The following is condensed from the Fortnightly Narratives of the Famine, published by the Government of Bengal.

Origin of the distress.—The rainfall of the year 1872 was very short, being only 29 inches, against 58 inches which fell in the previous year. The *kharif* harvest was therefore very short, and the *rabi* fell below the average.

The following year (1873) opened with a very short *máhuá* crop. The rains commenced late, and the *bhadoi* crops had been partially sown when a lull ensued. When the rains again commenced, it was not only found too late to sow the remainder of the *bhadoi* crops, but the rain came down in such torrents as to beat down and drown the young crops. Maize and *máruá*, which are the mainstay of the bulk of the agricultural classes, were all but destroyed, the former yielding a 2-anna and the latter a 3-anna crop. This state of things was general all over the sub-division, except in the southern and south-eastern tuppehs of Chechári, Seemáh, Báresand, and portions of Mánkheri and Bári, where the crops averaged from 6 to 8 annas.

Thus deprived of two principal sources of food, the ráyats directed their whole energies to the cultivation of paddy. The plentiful rainfall was exceedingly favourable. The stock of paddy of the previous year, which had been rather short owing to partial failure of rain in 1872, was freely drained in the hope of reimbursement by a bumper paddy crop, of which there was every prospect. But the outlook of the harvest was completely changed by an early cessation of rain. In the early part of September the falls of rain began to diminish, causing great anxiety in the minds of the people, as they had completely drained their reservoirs in the course of transplanting in the hope of getting some rain in September and October. The last rainfall of any consequence occurred on the 13th September, and since then the *kharif* began to suffer. The dampness of the soil and a few light showers enabled the people to sow a few *rabi* crops, but the hot dry days soon made the soil as hard as iron and put an end to all agricultural work. The rainfall of the year 1873 was indeed 10 inches higher than that of the previous year, but the crops of the former were considerably poorer than those of the latter, as the rainfall of 1873 was very unevenly distributed, being unusually heavy at one time, and holding off at another when it was urgently needed.

It would thus appear that the year 1873 opened with a comparatively short food-stock, and a very poor *máhuá* crop. The *bhadoi* crops, maize and *máruá*, almost completely failed, and what little there was of it was reserved

as seed-grain for the next year. The succeeding *kharif* paddy was equally a failure. Its outturn, as ascertained by careful and repeated enquiry at the time, was as follows:—

Japlá	2 to 4 annas
Belaunjeh	
Untári	
Deogán	
Pundág	3 annas.
Central, southern and south-western tuppehs ...	5 to 7 annas.

Of these, Japlá and Belaunjeh and Deogán form the northern face of the sub-division, and Untári occupies its extreme north-west corner. It is in these parts, and also in Pundág, which forms the eastern centre of Palámau, that the pressure of the famine was most severely felt.

Supply of food during the famine.—At no time during the distress, which might be said to have lasted from January to the following June of 1874, was any actual scarcity of food felt in the sub-division. When the authorities saw in January that a famine was fast approaching, they invited the assistance of the zamindárs of Palámau, and encouraged the grain-dealers to import to the utmost extent, and even the ordinary cultivators were moved to utilize their plough-cattle for importing on their own account. Large quantities of grain were kept continually pouring into Palámau from Lohárdagá, and to a less extent from Bárwe and the Tributary States of Sargujá, Gángpur and Jáshpur.

The stock of food was further increased by a bumper crop of *máhuá*. Owing to seasonable rainfall in February and early March there was a wonderful increase in the anticipated outturn of the cold weather crops. The influx of *máhuá* and the *rabi* grains considerably eased the strain on stocks, although at the time it was feared by the authorities that they would afford little relief in the presence of the increasing demand for exports to the famine-stricken districts of Behar.

The increased activity of the trade soon led to the overstocking of the country with food. As early as May the *golás* of the local traders were reported to be full, and since then the bazars were kept always well supplied. The mahájans did not open their *golás* for sale until July, that is, until such time as enabled them to judge of the prospects of the succeeding paddy crop; nor did they receive many applications for grain from their clients, who usually commenced to borrow about the month of May. The plentifulness of food-supply was said to be due to the note of alarm of a general famine all over Bengal having been sounded as early as December and January, and every one trying to secure for himself a stock of food while he could.

Prices of food-grains.—The following statements show the wholesale prices of coarse rice, wheat, maize and gram at the five important markets of Daltonganj, Gárwá, Hosseinábád, Sátbarwá, and Mánká.

RICE.

Number of seers wholesale per rupee.

	Daltonganj.	Gárwá.	Hosseinábád.	Sátbarwá.	Mánká.
Fortnight ending—					
21st February	11·68	12·36	12	13·50	13·75
7th March	12 36	12·36	11·25	11·75	13 50
21st "	12·36	12·50	11·25	12·50	12·50
4th April	11·81	12 37	11·25	12·37	12·94
18th "	12·94	12·36	11·25	13·50	13·87
2nd May	13	12·94	12	12·25	13
16th "	12·94	12·36	11·5	12·36	12·36
30th "	12	12·36	10·75	12·36	12·25
13th June	11·5	12·36	11·25	.....	12·5
27th "	12·5	11·57	11·25	13·5	13·5
11th July	14·06	14·62	12·36	14·75	14·75
25th "	14·06	14·62	.....	14·50	15·18
8th August	14·25	15 75	12·75	14·50	14·75

WHEAT.

Number of seers wholesale per rupee.

	Daltonganj.	Gárwá.	Hosseinábád.	Sátbarwá.	Mánká.
Fortnight ending—					
21st February	10·12	11·25	11·80	11·25	10·75
7th March	11·25	11·81	11·25	10·66	.....
21st "	11·75	11·75	13·50	11·25	.....
4th April	12·12	12·37	13·50	12	13·50
18th "	12·94	12·94	14·60	13·50	13·25
2nd May	12·94	13	12·94	13·50	12·0
16th "	13·5	12·94	12·94	13·50	12·36
30th "	12·36	12·94	13·50	13·50	13·0
13th June	12·6	12·25	12·94	.....	11·25
27th "	11·81	12·36	13·50	13·5	.....
11th July	12	12·36	13·5	13·5	.....
25th "	12·25	12·36	.....	13·5	.....
8th August	12·36	12·36	13·5	13·31	.....

MAIZE.

Number of seers wholesale per rupee.

	Daltonganj.	Gárwá.	Hosseinábád.	Sátbarwá.	Mánká.
Fortnight ending—					
21st February	13·5	14·62	15	15	15·25
7th March	13·5	13·75	14·62	11·25	11·25
21st "	13·75	13·50	13·50	13·50	14
4th April	14·62	14·62	15·18	13·50	14
18th "	14·62	14·62	14·62	15·62	.....
2nd May	15·75	17	.....	14·6	15·6
16th "	14·94	16·87	.....	14·87	12·36
30th "	.....	16·75	.....	14·6	.....
13th June	.....	16·87	.....	.....	16·25
27th "	15·18	15·5	.....	13·5	13·5
11th July	15·75	16·81	.....	16·62	16
25th "	16·3	16·75	.....	.....	16·31
8th August	16·0	16·50	.....	.....	.....

GRAM.

Number of seers wholesale per rupee.

	Daltonganj.	Gárwá.	Hosseinábád.	Sátbarwá.	Mánká.
Fortnight ending—					
21st February	11·25	13·50	14·62	11·81	10·0
7th March	11·66	13·75	14·62	11·25	11·25
21st February	13·50	14	15·75	12·25	13·50
4th April	13·50	14·5	15	13	13·75
18th "	15·62	15·75	15·75	14·62	14·25
2nd May	15·75	15·75	15	14·75	15·75
16th "	15·75	15·75	14·75	15·18	15·18
30th "	15·18	15·18	15·18	15·12	15·25
13th June	14·62	14·75	15·18	.....	14·75
27th "	15·75	15·25	11·25	15·12	13·5
11th July	15·62	15·18	15·18	15·75	15·25
25th "	15·25	15·18	.....	15·06	15·18
8th August	15·25	15·75	15·18	15·18	15·0

Prices of all the food-grains began to fall rapidly after the month of June, in which they reached their climax. In February the country was in a state of alarm, and the market opened with comparatively high prices, which slowly improved till May. Since the beginning of this month the prices began to rise again till the middle of June, after which the market recovered very rapidly. As I have said, there was no want of food in the market at any time of the distress, but the grain-dealers held their stocks tight, and did not open them until the country became overstocked with food. *Máhuá* in particular became

so abundant that in August it was reported to be selling at 5 maunds for the rupee, and to be unsaleable in many places.

Relief works.—Eleven relief works were opened and maintained by the Government in different parts of the sub-division. The following statement shows the average number of persons relieved on each of them during each fortnight of the period from February to July 1874 :—

RELIEF WORKS IN PALÁMAU DURING THE FAMINE OF 1873-74.

Statement showing the average number of persons relieved in the fortnight ending—

	21st February.	7th March.	21st March.	4th April.	18th April.	2nd May.	16th May.	30th May.	13th June.	27th June.	11th July.
No. 1. Daltonganj station roads... ...	236	337	386	343	490	480	200	143	37	8	29
,, 2. Chándwá road	702	940	605	615	798	912	1,922	2,772	35	25	16
,, 3. Behar road	756	1,533	1,540	1,318	1,613	2,233	2,927	2,060	2	.....	.....
,, 4. Mahárájganj road	876	2,062	1,130	844	1,[illegible]22	1,597	2,287	3,848	574	131	72
,, 5. Gárwá road	822	790	311	634	918	1,264	1,351	1,559	.....	.....	.....
,, 6. Untári road	1,686	4,287	2,439	2,554	3,661	3,460	4,677	3,984	.....	79	.....
,, 7. Majhewán road	495	1,256	594	900	1,032	1,519	1,754	1,709	.....	.....	.....
,, 8. Japlá road	304	555	604	588	1,186	1,573	1,983	2,314	.....	.....	.....
,, 9. Petty works in Government estates	...	256	327	763	950	583	485	656	822	800	495
,, 10. Bálumat road	...	.....	.....	300	1,840	3,024	5,336	3,691	23	24	39
,, 11. Untári-Benares road	...	.....	.....	.....	...	568	1,090	2,214	.....	.....	.....
GRAND TOTAL ...	5,377	12,025	7,936	8,868	13,610	17,222	24,012	25,040	1,493	1,067	653

To judge from the number of persons relieved, it would appear that the pressure of the famine was most felt in Untári, and next to this in the north and north-east of the subdivision, which is traversed by the Behar and Mahárájganj roads, and in Japlá. The works were commenced in February and finally closed in July. In the beginning there was a very rapid increase in the number of relief labourers, but in the middle of March there was a sudden fall owing to the opening of the *rabi*, and shortly after of the *máhuá* harvest. But directly on the completion of these harvests the number began to rise very rapidly, until it reached its climax at the end of May. This rapid increase was attributed at the time to the fact that between the completion of the *rabi* harvest and the commencement of the rains the agricultural people had little or no work in the field, and that many of those who flocked to the works came to save their little stock for use during the rains, when they would have to work on their own account. But behind this, it must be admitted that there were other circumstances which proved more attractive to the relief labourers than those arising from absence of field work and the desire for saving their stocks for future use. The prescribed rates of relief wages were very profitable to the labourers, many of whom were found to be saving cash out of their daily wages, and the manner of enforcing work was lenient. When the authorities came to discover the true reasons for the rapid accession of fresh labourers to the relief gangs, and found that the reduction of wages by a pice per head had no effect whatever in checking the increase, they gave orders for the strict enforcement of task-work and for the payment of wages in grain instead of in cash, as had hitherto been the case. The effect of these measures was something very unexpected : the number of labourers fell from 25,040 to 1,493 ! And even of this latter 822 were professional *Nuniahs* employed on special work, who could not be ranked among the relief labourers in any sense.

Rates of relief wages.—The prescribed rates of wages were :—

To an able-bodied man doing full work ...	7	Gorakpuri pice	=1½ anna.
,, a man not able to do a fair day's work ...	6	,,	,,
,, a lad of 15 to 16 years	5	,,	,,
,, a lad of 10 to 14 years	4	,,	,,
,, a lad of 6 to 10 years	3	,,	,,
,, a strong able-bodied woman	5	,,	,,
,, a weakly woman or girl of 12 to 16 years ...	4	,,	,,
,, a girl above 6 and under 12 years ...	3	,,	,,

The above rates of wages were continued till May, when the number of labourers having evinced a tendency to rise very rapidly, and the number of women and children having been found to be out of all due proportion to

that of men, the experiment was tried, though in vain, of reducing the wages of women and children by one pice per head. This measure having failed to produce the desired result of counteracting the rapid increase in the number of people seeking work on the relief works, orders were given to reduce the wages of all labourers—men, women, and children—by one pice, to rigorously enforce piece work in place of the daily wage system, and to pay all coolies without reserve in grain instead of cash. These measures led to a sudden and unexpected collapse of all the relief works, proving beyond doubt that the enormous increase in the number of relief-labourers had been due not so much to any scarcity of food or inability on the part of the people to support themselves, but to the favourable wages and the easy work which had hitherto characterised the relief operations.

The rates of grain wages which were prescribed at the time were as follow:—

Male adult ...	...	1 *kachchá* seer of rice (9 chittaks) per diem.
Woman ...	...	¾ ditto ditto.
Child ...	...	½ ditto ditto.

The usual grain wages of the sub division were one and a half *kachchá* seers of rice or three *kachchá* seers of inferior grain per man per diem. The relief wages in grain were purposely kept low with a view to induce the people to leave the relief works for farm work, which was about to commence.

The rice payment system was, however, scarcely in vogue when the great body of the labourers decamped, and there was time only to distribute about 80 maunds of Government rice before they dispersed. In the latter half of June, when it was found that the deserters had left for good, the rates of grain wages were increased to one and a half *kachchá* seers of grain per man, one seer per woman, and half seer per child per diem.

Storage of grain.—Measures were taken at a very early period of the distress to secure a sufficiently large stock of rice, and have it stored at suitable depôts for use whenever the stocks of the country would give signs of exhaustion. For this purpose 20,000 maunds of Burma rice were imported through the Government of Bengal, 12,000 maunds were bought by the local authorities at Lohárdagá, the great rice mart in Chutiá Nágpur Proper, and Rs. 40,000 were advanced to the influential zamindárs of Palámau for the purchase of rice in the neighbouring districts and Tributary States The Burma rice was conveyed by canal to Dehree on the Són, and thence to Daltonganj by carts and pack bullocks. In all 29,826 maunds of paddy were stored in golás at 11 places:—Daltonganj, Parásiá, Pánki, Nowá, Morbe, Surki, Untári Majhewán, Hosseinábád, Kote and Sátbarwá. The stored grain was disposed of as follows:—

	Mds.
By grain-wages	1,268
„ advances to ráyats	19,608
„ sales to the public	4,618
Total ...	25,492

The remainder was left in the hands of the Government, and the narratives do not say how it was disposed of. Of the 1,268 maunds of rice paid in the form of wages, only 81 maunds were paid in kind to labourers up to the end of the fortnight ending the 13th June, when the relief works collapsed. The subsequent disposal of the grain, either in the shape of wages, advances, or sale was forced, and not called for by any pressure of scarcity. The local authorities were opposed in the beginning to the payment of wages in grain, and to the opening of the *golás* for fear of disturbing private trade. It seems they could not form a correct idea of the amount of private stocks in the subdivision, and reserved the Government grain for use at a later period when, as they feared, private trade would be found unable to keep up the required supply. It was after repeated remonstrances of the Government of Bengal, urging on the local authorities the desirability of payment in kind, that the latter were induced to open the *golás* and substitute grain for cash wages; but as we have already seen, only a very small fraction of the stored rice could be utilised in

the desired manner, and the great bulk of it had afterwards to be disposed of as best it could.

Financial results of the famine.—These are embodied in the following statement:—

	Rs.	A.	P.
Disbursement on relief works	1,49,300	0	0
Advances to zamindárs for purchase of grain ...	40,000	0	0
Charges of conveyance of rice from Dehree and Lohárdagá	5,644	15	6
Advances under the Land Improvement Act ...	14,115	0	0
Miscellaneous expenses	1,050	6	3
Total ...	2,10,110	5	9

The above excludes the price of rice bought at Lohárdagá and of the Burma rice imported through the Government of Bengal. The 32,000 maunds of rice imported from Burma and Lohárdagá might be valued at Rs. 1,12,000, at Rs. 3-8 a maund.

Charitable relief.—In February a Central Relief Committee was formed at Daltonganj, with branch sub-committees at each police station and outpost. Charitable relief commenced to be given in the last half of March, and was continued till the 8th of August following. During this period 375 persons roughly on the average received relief in their own homes. The relief was afforded in the shape of grain, but an exception was made in the case of some respectable but entirely destitute widows related to the old Nawabi family of Hosseinábád, who received relief in money. In return for money or grain supplied, work was exacted from all persons capable of affording it. The usual work required by the Committee from the women was the spinning of a quantity of cotton into thread, which the Committee then bought up and sold on their own account.

On the 28th of March a meeting was held at Ránchí to establish a District Relief Committee. At this meeting Rs 3,000 was subscribed, the whole of which was made over to the Central Relief Committee of Daltonganj.

In all Rs. 7,115 was realised for the purposes of the charitable relief.

Causes of famines in Palámau.—All the known famines in Palámau have been the direct outcome of drought, commencing early in September and lasting till the close of the rice harvest. The injurious effects of the autumn drought may be further increased by unseasonable rainfall during the previous rainy season, as was the case in 1873, and to a slightly less extent in 1888. The characters of these two seasons were very similar to one another, (*vide* page 126 Part I). Storm-waves are out of the question, and floods are well nigh impossible in a high and dry country like Palámau, nor have insect pests or other blights ever been known to cause any appreciable injury to the crops of the sub-division.

As regards the importance of the three harvests of *bhadoi, kharif* and *rabi* to the different classes of people inhabiting the sub-division, I need not reproduce at length what I have already said in the section on food-supply (page 8 Part II). It may be assumed that the mere loss of the *bhadoi* crops—the chief among which are maize and *máruá*—will but slightly affect the Aryan population, but will tell more or less severely upon the aboriginal and semi-aboriginal tribes and castes who inhabit the hilly parts of the sub-division and depend mostly for their sustenance on the produce of the rain crops. On the other hand, the loss of paddy, especially if accompanied by the loss of the *rabi* crops, will be as trying to the Aryan population as the loss of the *bhadoi* to the non-Aryans. Unless both the *bhadoi* crops and the paddy be seriously damaged in the same year, there may be no fear of any general scarcity in the sub-division, and the abundance of one class of food-grains will relieve the strain on the other. *Rabi* crops and *máhuá* are of comparatively small significance, but in a year of deficient *bhadoi* and paddy harvest these stand in good stead, coming into the market, at a time when the pressure of scarcity is just beginning to be felt. During the famine of 1873-74 the *máhuá* and *rabi* produce are known to have remarkably eased the strain on food stocks, so much so that the famine might be said to have ended in April, although its appearance, as judged from the number of persons seeking work on the relief works, was artificially kept up by favourable wages and easy work.

Divisions of the subdivision according to degrees of liability to famine.—The famine map annexed to this report shows the sub-division distinguished according to shades of colour into three tracts, according to the degrees to which they appear to be liable to famine. The darkest shade represents the tract which the experiences of 1868, 1874, and to a less extent of 1889 have proved to be chronically liable to famine. This includes the police circle of Gárwá, including the jurisdiction of the outpost of Untári in the extreme north-west of the sub-division, the police circle of Hosseinábád, including the fiscal divisions of Japlá and Belaunjeh, and the police circles of Chittarpur and Páton in the north and north-east of the sub-division. The area and population of this tract are given below :—

	Area in square miles.	Population.	Density of population per square mile.
Gárwá	588 ...	79,117	134·5
Hosseinábád	650 ...	102,515	157 7
Paton	530 ...	79,408	149 8
Chittarpur	350 ...	36,838	105 2
Total ...	2,118 ...	297,878	140·6

The intermediate shade represents the tract which experience has shown to be as often liable to famine as the tract already mentioned, but the distress has never been known to be as acute as in the latter. It includes the police circle of Ránká in the west, the police circle of Daltonganj occupying the centre and east of the sub-division. In 1873-74 the eastern portion of this police circle included in the tuppeh of Pundág was one of the most afflicted parts of the sub-division, but in 1868 it figured only among those affected to a moderate extent. The area and population of this second tract of country are given below :—

	Area in square miles.	Population.	Density of population per square mile.
Ránká	640	46,546	72·7
Daltonganj	590	77,299	131·0
Total ...	1,230	123,845	100·7

The remaining two police circles of Latehár and Máhuádánr, which include the south and south-east of the subdivision, may be said to be only occasionally liable to famine. The famines of 1868 and 1874 affected these circles, and in particular Máhuádánr to a very slight extent; but for this reason only they cannot be considered as out of the pale of famine. Their area and population are as follow :—

	Area in square miles.	Population.	Density of population per square mile.
Latehár	538	48,432	90 0
Máhuádánr	355	14,667	41·3
Total ...	893	63,099	70·6

Relief works and centres of relief.—Both in 1868 and 1874 the construction and repairs of roads were practically the only works of relief undertaken by the State. In 1868 a well-ordered scheme of irrigation works, which were meant to serve the double purpose of relief and of protection from future famines, had to be abandoned owing to the difficulty of keeping scattered petty works under proper control. In the same way, in 1847, two large irrigation works—one at Dawádi and the other at Pokráhá—had to be abandoned, after all arrangements had been made to start them as relief works, and only a few petty works, consisting of the construction of four new embankments and of repairs of 24 old ones were undertaken by the State. It would thus appear that, although the construction of tanks and embankments for the purposes of irrigation might commend themselves as the most appropriate of all relief works, yet the fact of such petty works being scattered over the country, and of the evident difficulty of managing them by means of low-paid native officers, has proved an insurmountable barrier against the undertaking of such works by the State. On the other hand, there are many reasons which would prevent zamindárs from receiving Government loans for the purpose of undertaking works of irrigation as measures

of relief. These have been dealt with in page 59, Part II, where a remedy has been also suggested by which the supposed difficulties may disappear.

The relief works which were opened during 1868 were—

(1) Daltonganj station roads;
(2) Ránchí road;
(3) Behar road;
(4) Mahárájganj road;
(5) Gárwá road;
(6) Untári road; and
(7) Gárwá-Khujri road.

In 1874 the relief roads were—

(1) Daltonganj station roads;
(2) Ránchí road;
(3) Behar road;
(4) Mahárájganj road;
(5) Gárwá road;
(6) Untári road;
(7) Majhewán road;
(8) Japlá road;
(9) Bálumat road; and
(10) Untári-Benares road.

All the above roads, with the exception of the Daltonganj station roads, the Ránchí road, and the Bálumat roads traverse the north-east, north and north-west of the sub-division, and were thus conveniently situated for relieving the distress which was known to be acute in these parts. All these roads, with the exception perhaps of the Gárwá road, are yet in a very rude state, being little better than surface tracks, and thus admit of considerable improvement. They may serve as excellent relief works in future.

Besides the above, various village roads connecting the important marts of the country with one another may be made by means of relief labour with great advantage. Being small and inexpensive works, and requiring a reasonably short time for their completion, they are well adapted to the conditions under which relief work has to be carried on. Among the village roads the Officiating Assistant Commissioner of Palámau, Mr. H. R. Renny, has selected the following:—

1. Road from Hosseinábád to Bholpur on the Untári road *viâ* Sonpurá and Bhawanáthpur—53 miles.
2. Village road from Kedh to Latehár *viâ* Kenandrá—20 miles.
3. Village road from Latehár to Seemáh—20 miles.
4. Village road from Leslieganj to Bári—6 miles.
5. Village road from Daltonganj to Páton—14 miles.
6. Road from Jaypore to Dakheliá *viâ* Sháhpur—17 miles.
7. Village road from Sháhpur to Chittarpur—10 miles.
8. Village road from Rámpur to Hosseinábád *viâ* Karampur—14 miles.

Measures of protection.—It may be safely assumed that the occurrence of scarcity or famine is directly associated with the failure of *kharif* paddy, and if measures be taken to prevent it from succumbing to the effects of occasional droughts, the sub-division may be effectually secured against famine. Such measures as have been already pointed out would consist of the construction of suitable irrigation embankments, tanks and canals, of which almost an indefinite number can be made throughout the sub-division, and of the repairs of the existing water reservoirs of the country. There is no paddy-growing village in Palámau that has not one or more *áhrás* or reservoirs; but many of these are either too small to be of much use, or have fallen into disuse. The cause which prevents the zamindárs from making new embankments and repairing the existing ones, and also the difficulties which have so far stood in the way of the State undertaking such irrigation works as measures of famine relief, have been set forth in the section on Irrigation. In view of these difficulties, it behoves Government to decide beforehand what policy it should follow with regard to the construction of irrigation works in times of famine, for, as I have already said that both during 1868 and 1874, several important irrigation works had to be abandoned owing to difficulties which had not been properly taken into account. In the section on irrigation, I have described two tracts of flat alluvial country which may be profitably provided with a system of irrigation canals. In order that such works may be undertaken as relief measures, it is necessary that a well prepared scheme of action be prepared before hand, so that no time may be lost in carrying it into effect in the time of famine.

CHAPTER IX.

The fauna and flora of Palámau are the same as those of Chutiá Nágpur Proper, and have been treated of in Chapter IX, Part I of this Report.

APPENDIX I.

Fiscal Divisions.

THE sub-division of Palámau is divided into three parganás, viz., parganá Palámau, parganá Japlá, parganá Belaunjeh. The fiscal division of Palámau is again sub-divided into 25 *tuppehs*. The *tuppehs* are supposed to have once represented the several proprietary estates of the parganá, but they no longer do so. The 25 tuppehs are :—

(1) In the south of the sub-division—Tuppehs Seemáh, Chechári, Sunnaiyá, Báresand and Khámí—altogether 5.
(2) In the south-east—Tuppeh Tuppah—1.
(3) In the south-west—Tuppehs Mánkheri, Doothoo, Oodaipur, Oochári and Barcole, Chilki, Kápurmundá, and Kutree—altogether 8.
(4) In the west—Tuppehs Doorjág and Untári—2.
(5) In the north-east—Tuppehs Deogán and Pundág—2.
(6) In the east—Tuppehs Kote, Imlí, Mátuli—3.
(7) In the centre—Tuppehs Bári, Turiyá, Goáwal, Tuliyá—altogether 4.

Of these tuppehs, Deogán contains 17 *shikmi* or subordinate *tuppehs*; Untári 8, and Turiyá 5.

APPENDIX II.

Meteorological Statistics.

Monthly Rainfall at Daltonganj for the 18 *years from* 1871 *to* 1888.

MONTH.	1871.	1872.	1873.	1874.	1875.	1876.	1877.	1878.	1879.	1880.	1881.	1882.	1883.	1884.	1885.	1886.	1887.	1888.	Average of the 13 years.
January ...	...	·55	...	1·65	1·65	...	1·80	1·16	...	·01	·10	...	2·14	...	·42	...	4·11	1·82	·86
February	·24	·41	...	1·79	1·79	...	2·25	·27	·31	1·07	·12	·33	...	·15	1·02	·10	...	·65	·37
March ...	·37	1·13	·60	·53	·53	·03	1·45	·72	·03	...	2·25	..	2·11	...	...	2·37	...	...	·67
April ...	·14	·90	·74	...	·02	...	2·32	1·07	...	·01	...	·44	·38	...	...	...	·25	...	·10
May ...	·68	·03	2·51	·01	·96	1·23	1·25	2·56	·12	·40	1·11	·33	·45	·78	·98	2·14	5·52	·23	1·10
June ...	13·51	·92	12·53	18·79	11·06	2·00	2·10	1·37	3·89	5·58	7·72	4·09	5·31	2·70	10·00	6·13	2·97	·34	4·87
July ...	16·01	8·52	9·30	14·88	15·65	17·01	6·92	10·51	18·83	6·03	14·50	11·09	10·18	7·30	12·19	6·41	18·29	19·77	12·45
August ...	9·84	8·35	4·40	14·80	7·82	7·69	11·6	12·09	9·21	7·46	17·18	15·75	8·11	9·23	16·68	7·91	10·81	21·42	12·37
September	12·31	9·27	·65	10·20	6·70	9·57	10·10	5·99	6·57	6·42	1·91	5·21	7·35	10·68	10·25	14·08	8·38	8·06	7·89
October	3·85	·43	...	10·05	·11	1·23	5·54	·67	·94	3·40	7·35	1·08	·49	1·27	3·30	9·35	2·19	...	·2·93
November	...	...	...	...	...	...	...	1·64	...	·45	...	3·57	1·62	...	...	·64	...	·10	·63
December	...	...	·93	...	...	...	1·58	...	...	·17	...	...	...	·10	2·60	...	...	...	·38
Total ...	56·95	30·61	31·69	72·70	46·29	38·76	46·91	37·45	39·84	29·34	52·24	41·89	38·09	12·06	56·32	49·13	50·38	52·37	44·52

APPENDIX III.

Statistics of Population.

Census of 1872.—The first Census of the population of the Palamau sub-division was taken in 1872. As remarked in respect of Chutiá Nágpur Proper, the sparseness of the population prevented the enumeration from being synchronous; and although the Census was believed at the time to be fairly accurate, the succeeding Census of 1881 showed that a great many people must have escaped enumeration in 1872. The population of the sub-division was returned at 366,519 souls, living in 2,667 villages, and inhabiting 68,719 houses. Taking the area of the sub-division as 4,260 square miles, the number of persons in the square mile was found to be 86, the number of persons per village to be 137, and per house to be 5·3.

Census of 1881.—The last Census, of 1881 was synchronous, and was believed to have been fairly accurate. The total population of the sub-division was returned as 484,822 souls, living in 2,859 villages, and 84,796 occupied houses. These gave the number of persons to the

square mile as 114·32, and for occupied house as 5·89. The statistics of population are exhibited in the following statement for each of the eight police circles in the sub-division :—

Police Circle.	Area in square miles.	Total population.	Persons per square mile.	Remarks.
1. Daltonganj ...	428 / 590	64,202 / 77,299	150·00 / 131·02	The lower figures are revised with reference to Government notifications, dated the 3rd December 1883 and 19th February 1884, sanctioning the re-arrangement of the thánâ jurisdiction in the Lohárdagá district. The upper figures only will be considered when comparing the population of 1872 with that of 1881.
2. Gárwá ...	570 / 588	75,899 / 79,117	133·16 / 134·55	
3. Ránká ...	770 / 640	64,300 / 46,546	83·51 / 72·73	
4. Chittarpur ...	364 / 360	36,591 / 36,838	100·52 / 105·25	
5. Páton ...	481 / 530	79,655 / 79,408	165·60 / 149·83	
6. Máhuádánr ...	301 / 355	14,667 / 14,667	48·73 / 41·31	
7. Hosseinábád ...	652 / 650	102,515 / 102,515	157·23 / 157·71	
8. Latehár ...	675 / 538	46,993 / 48,432	69·62 / 90·02	
Total ...	4,241	484,822	114·32	

It is to be observed that the police circles showing the densest population are Hosseinábád and Páton, the former containing a large stretch of alluvial country on the south bank of the Son, and the latter occupying the valley of the Ámánat. The two most sparsely peopled thannahs are Ránká and Máhnádánr, situated respectively in the west and the south of the sub-division.

Increase of population from 1872 *to* 1881.—The following shows in a concise form the population and its density in each of the two years 1872 and 1881 :—

	Population.	Density.
1872	366,519	86·00
1881	484,822	114·32
Increase in nine years	118,303	28·32
Percentage of increase on population of 1872 ...	32·28	...

As I have already observed in respect of Chutiá Nágpur Proper, the enormous increase of 32·28 per cent. in the course of nine years cannot be explained, excepting by supposing that the previous enumeration of 1872 must have been very defective.

In the following statement the increase in population in the nine years from 1872 to 1881 is shown for each police circle :—

Police Circle.	Total Population.		Increase.	Percentage of increase.	Remarks.
	1872.	1881.			
1. Daltonganj ...	53,976	64,202	10,226	18·95	
2. Gárwá	59,212	75,899	16,687	28·18	
3. Ránká	42,283	64,300	22,018	52·07	
4. Chittarpur ...	27,196	36,591	9,395	34·55	
5. Páton	59,961	79,655	19,694	32·84	
6. Máhuádánr ...	12,334	14,667	2,333	18·92	
7. Hosseinábád ...	78,336	102,515	24,179	30·87	
8. Latehár	33,222	46,993	13,711	41·45	
Total ...	366,519	484,822	118,303	32·28	

Urban population, with list of chief towns.—There are only two small towns in the Palámau sub-division (Daltonganj and Gárwá), having a population of 7,440 and 6,043 respectively.

APPENDIX IV.

Areas of Cultivation.

The sub-division of Palámau, exclusive of the fiscal divisions of Japlá and Belaunjeh, was surveyed by Major Thompson in 1866. He gave the approximate estimates of cultivable and uncultivable land as follows:—

Total area of the subdivision as then constituted ...	3,650 sq. miles.		
Cultivated area	456	„	or 12·5 per cent.
Uncultivated, but culturable area	2,309	„	or 63·2 „
Area of hills and barren waste	795	„	or 24·3 „

The return XLIB (now abolished) for 1874 showed the total area of the sub-division as 4,260 square miles, and the cultivated area as 757 square miles, that is, 17 7 per cent. on the total area. This return included the fiscal divisions of Japlá and Belaunjeh, of which the former comprises a large tract of fully-peopled and well-cultivated country.

In the absence of statistics based on actual field survey, it is not possible to offer any accurate estimate of areas of cultivation. Palámau contains a much larger tract of wild, uncultivated country than Chutiá Nágpur Proper. The cultivated area in the latter sub-division is estimated at 31·4 per cent. (*vide* page , part I). It will be very near truth, I believe, to estimate the cultivated area in the Palámau sub-division at 25 per cent., or one-fourth of the total area. No statistics exist as to areas under the different crops, and I feel unable to offer any which may be accepted as approximately correct.

APPENDIX V.

Statistics of rates of rent.

(1) *Rates of rent.*

There are three different ways in which rent is assessed in Palámau. In Deogán, Japlá and Belaunjah, the greater portion of the cultivated land is held at *bátwárá* rates, that is, the produce of the field is divided equally between the landlord and tenant. The remainder is held *nagdi*, that is to say, rent is paid in cash at fixed rates. The following rates I found to be prevailing in the three fiscal divisions named above:—

	Rice land. Rent per local bighá.	Upland. Rent per local bighá.
Deogán	Rs. 6 to Rs. 3	Rs. 4 to Rs. 2.
Japlá	„ 5 „ „ 2	„ 3-8 „ 4 annas.
Belaunjeh	„ 4 „ Re. 1	Re. 1 „ 4 „

The local *bighá* I found prevailing in these parganás was 100 cubits square, which is equal to $1\frac{9}{10}$ths of a standard bigha.

In parganá Palámau the prevailing form of land assessment has for its basis certain mixtures of high and low lands for which a joint rent is paid. This is known as the *páriádári* and *kánwádári* system. The relative proportion of the high and low lands, as well as the size of the *páriá* or *kánwá*, are so variable that no definite rates of rent can be easily calculated. At the last settlement of the *khálsá* villages, the Settlement Officer, Mr. Hewitt, after elaborate enquiries, fixed the size of the *páriá* at 3 local bighás, or 6¾ Bengal standard bighás, of rice land, and the same measure of upland. The rates of rent at which he and his successor, Mr. L. R. Forbes, assessed the *páriás* in the Government villages may be considered as representing the average of the rates at which rent is levied by zamindárs in their own villages. At the settlement the *páriádári* villages were classed in three divisions, according to their fertility, position, &c., and the soils were likewise divided into three classes. A first-class *páriá* contained the fixed measure of rice land and upland, both of the first class; a second class *páriá* contained rice and upland, both of the second class; and so also the third. In first-class villages four different scales of rent were adopted, viz., Rs. 16,12,8, Rs. 15,9,6, Rs. 15,6,3, and Rs. 13,9,3 for first, second, and third class *páriás* respectively. In second-class villages there were two scales, viz. Rs. 12,6,4 and Rs. 10,5,2, and in third-class villages two scales, viz Rs. 8,3,2 and Rs. 8,4,2. The last-mentioned scale was applied to the villages in the southern and south-western tuppehs of Seemáh, Khámi, Door Jag and Baresánd, which are inhabited almost exclusively by the aboriginal tribes, who pursue a very lax system of agriculture. These people show a decided fondness for upland cultivation, and owing to this reason their *páriás* were made to contain upland twice as much as the lowland.

Some of the villages in parganá Palámau are held on the *utakar* or *bighâwati* system; that is to say, rent is paid for each kind of land cultivated by the tenant. The rent of rice land in these villages varies from Rs. 4 to Re. 1 per local bighá (which is equivalent to 2½ standard bighas), and from Re. 1 to annas 4 per bighá of upland.

(2). *Ábwábs.*

There are various improper and illegal cesses enacted by superior landholders from their under-tenure-holders, and by the latter from the cultivators. The chief among them are described below:—

(1). *Madad* or assistance.—The history of this cess is described by the Assistant Commissioner, Mr. L. R. Forbes, as follows:—"This is a cess that has obtained in the parganá (Palámau) from time immemorial, and from its nature can hardly be called illegal, notwithstanding that the Revenue Courts have hitherto persistently thrown it out when included in claims under the Rent law. It has its origin from the time when the proprietors of Palámau, in distributing their newly-acquired possessions among their immediate relations and followers, had less regard to the fixed revenue receivable from each estate than to the assistance, either in money or supplies, which each of these sub-proprietors was bound by his *sanad* to accord to his chief in time of need, and which in those troublous times was necessary to their very existence. These estates, except when given exclusively for religious purposes, were all service grants, the *sanads* of which stipulated for a mere trifle in the way of revenue, the grantee being liable to furnish *madad* to his chief in case of need. Sometimes this is distinctly stated in the *sanad;* and at others it is vaguely alluded to under the expression "*maram sharam,*" but more frequently the grantee was liable to pay *madad* by usage. In earlier and more unsettled times, the grantees appear to have been liable to render service or *madad* at any time and to any extent as the exigencies of the time might demand; but as more peaceable times arrived, so gradually the exactions of *madad* began to assume a more fixed form, and to be confined to a payment in money regularly made every other year, according to the wealth or means of the grantee.

"This exaction of *madad* was not confined to the *máhárajás* or reigning proprietors, but the grantees of estates or jagirdars and others, in distributing their estates, in like manner stipulated for *madad* in the *sanads* granted by themselves. So in like manner grantees of a lesser degree and farmers recouped themselves by demands upon the cultivators, who were the parties who really paid, rather in the shape of gradually enhanced rents, than of any special and periodical demands upon them. The rates at which *madad* was demanded were not governed by any fixed principles, but appear still to have been confined within reasonable limits; and it was only in latter years that some of the landed proprietors getting into difficulties attempted, and in many cases succeeded, in obtaining a very large increase." To show the insignificance of the rent assessed on *jágir* villages, and the enormous increase in late years of *madad*, Mr. Forbes quoted the instance of a jágírdár in tuppeh Deogán who held 21 fine villages on a yearly rental of only Rs. 35. The jágírdár was also liable, to begin with, to an annual *madad* of Rs. 40, but was latterly called upon to pay a *madad* of Rs. 400.

(2). *Salámi*, literally salutation fee.—Several *ábwábs* are included in the general term *salámis*, *e.g.*, *salámi dasahará*, paid by tenants and farmers, rarely cultivators, to the superior landlord on the occasion of the *Dasahará* festival in the month of Áswin; and *salámi bábooan*, paid as a mark of respect to the *bábao* or landlord, &c. The *salámi* is paid at the rate of Re. 1 by each under-tenure-holder.

(3). *Matsuddi kharchá.*—This is a cess levied to meet the expenses on account of office establishment, and is universally collected by all: by the zamindárs from the middlemen, by the middlemen from the cultivators; the rate varies from 2 pice to 1 anna in the rupee.

(4). *Dák kharchá.*—In Palámau the Government levies this cess from the superior landlords at a fixed rate (4 per cent.) per rupee on the revenues payable by them. To reimburse themselves, the landlords levy the cess on the sub-proprietors and farmers at the same rate on their gross rentals, and thus make an illegal profit. In most instances the middlemen recoup themselves and make a profit to boot by taxing the cultivators; in others the *dák kharchá* is not separately collected from the latter.

(5). *Digwár kharchá.*—This is a cess levied in those zamindáries where *digwárs* or *ghátwáls* are maintained for the purpose of guarding *ghát*s or passes. It is levied in various ways. Sometimes the landlord pays from his own treasury, but more frequently it is levied from the sub-proprietors or farmers within whose boundaries the *ghát* is situated. These, again, levy the amount payable from the cultivators. It is believed that no attempt is made to make a profit.

(6). *Dewán rasum*—Is a cess levied in those extensive estates in which *dewáns* are entertained, and is limited to the payment of Re. 1 per annum by sub-proprietors and farmers.

(7). *Mohar kharchá*—Is also a cess confined to large estates, and is paid in consideration of the seal affixed to rent receipts. The rate varies from Re. 1 to 4 annas for each sub-proprietor or middleman.

The above ábwábs are paid regularly every year in those estates in which they are actually in vogue. Besides these, there are innumerable demands made from time to time on various pretexts. Some of these are mentioned below.

(8). *Mokáddamá kharchá.*—A contribution levied from tenants to enable the zamindár to carry on a law suit.

(9). *Gámi.*—A cess levied by the zamindár on the occasion of a marriage in his family. The usual rule is for the sub-proprietors and farmers to present the landlord with Re. 1 each. Besides, they are called upon to supply him with various necessaries, such as fuel, earthen vessels, &c.

(10). Cesses levied by zamindár to enable himself to purchase an elephant, a horse, or a hawk: these are respectively known as *hátikar*, *ghorkar* and *bájkar*.

(11). *Mukh-dekhái*—A present of Re. 1 made by each sub-proprietor and farmer to the infant child of the zamindár. The *mukh-dekhái* ceremony usually takes place when the child is six days old.

(12.) *Talaváná kharchá.*—This is a fine levied from recusant tenants to whom it was necessary to send a peon for the purpose of enforcing payment of rent. It is exacted at the rate of 2 annas per diem for each peon deputed to the work.

All the above ábwábs are paid in cash; but the most oppressive exaction known in Palámau, as in Chutiá Nágpur Proper, is the *bigári* or forced labour. The subject has been fully dealt with in part I of this report, (page 144). By ancient custom, every landlord was entitled to three days' labour from each of his ráyats—one day's labour at each of the three harvests, *bhadoi*, *kharif*, and *rabi*. When the principle of the custom is adhered to, there cannot be much hardship entailed on the ráyats; but it is very frequently abused in a very cruel manner. Instead of three days in the year, the poor ráyats are compelled to work for a week, often for a great many more days. Sometimes they are compelled to accompany the zamindár to distant places, and thus are kept away from their own work. It is a frequent complaint that many zamindárs do not allow their ráyats to till their own fields until their own have been cultivated. In the same way, there is a custom that all the ráyats of the village should work one day to transplant and another day to cut the zamindár's paddy. For this work they are paid full wages, but the custom is liable to great abuse when an unscrupulous landlord forces his tenants to finish the transplantation or harvest of his own lands before allowing them to turn to their own fields. The seasons of transplanting and of cutting paddy are very hard and critical times, when the very boys and girls are pressed into the service. In such times to be kept out of their own fields by being compelled to work for the zamindár is an evil and cruelty which must be bitterly felt by the ráyats.

When *begári* is exacted, it is usual for the zamindár to give the *begár* 3 *kachchá* seers of grain each, as a sort of subsistence allowance. Dishonest landlords have been known to refuse even this meagre allowance.

Besides three days' labour in the year, the ráyats are bound by ancient custom to give one plough to the zamindár at each harvest. This custom has been also greatly abused: all the ploughs that a ráyat may happen to possess are pressed into his service for two or three days together. This is a serious grievance, as the ploughs are taken away at a time when they are most needed by the ráyat himself.

(3) *Rent-suits.*

The number of rent-suits instituted in the Palámau sub-division appears to be very small indeed. The relation between the landlords and the tenants is as yet cordial. The statistics of rent-suits are as follows:—Number of suits instituted in 1882-83, 60; in 1883-84, 50; in 1884-85, 46; in 1885-86, 61; in 1886-87, 45; in 1887-88, 49; in 1888-89, 53.

APPENDIX VI.

Statistics of Land Tenures.

The following statement exhibits the number of estates held under, and rental paid by each kind of tenure in the sub-division of Palámau:—

Name of Tenure.	Number of estates.	Rent paid. Rs.	A.	P.
Parganá Palámau—				
Jágírdári	136	1,476	11	0
Mokarári	5	489	7	0
Ijárádári	88	2,435	11	0
Tikkádári	383	36,429	9	10
Newly populated land not yet settled ...	1	200	9	0
Parganá Belaunjeh—				
Permanently-settled estates ...	46	10,188	8	0
Mustágirí	1	3	0	0
Son fishery	1	51	0	0
Parganá Japlá—				
Revenue-free estate	1	.....		
Koa and Kuth	1	2,000	0	0
Total ...	663	53,273	14	0

There are various subfeudal tenures under the jágírdárs and ijárádárs; but there is no means at present to ascertain their number. Very few intermediate tenures have been registered as yet under Act VII (B.C.) of 1876.

APPENDIX VII.

Wages and Prices.

(1) *Prices.*

The following statements show the prices of the chief food staples of the sub-division since the year 1878-79. The statistics for the year 1881-82 could not be found in the Palámau sub-divisional office.

1878-79.

	Wheat.	Common rice.	*Máhuá.*	Maize.	Gram.
April 1878 ...	33·97	26·97	92·2	...	53·75
May " ...	32·42	26·85	99·6	...	58
June " ...	31·51	25·29	90·87	56·91	66·61
July " ...	26 38	23·30	92	40	57
August " ...	25·97	21·47	96·8	81	48·62
September " ...	25	17·37	80	...	38·60
October " ...	23·80	20·75	79·6	45·35	43
November " ...	22·90	18	57	39	39·85
December " ...	16 17	16·01	43	27	27 95
January 1879 ...	16·62	14·12	52·08	21·29	25·50
February " ...	14·89	12·94	37·12	18·29	20·08
March " ...	14·03	12·33	34·56	17·80	17·58

1879-80.

April 1879 ...	18·56	13·5	23·62	17·50	13·5
May " ...	13 50	15·18	30·37	20·25	15·18
June " ...	14·62	15·18	40·57	18·56	14·62
July " ...	14·62	14·62	30·37	22	14·62
August " ...	13·75	14·62	33·75	20·25	14·62
September " ...	13·50	23·62	33·75	27	14·62
October " ...	13 50	21·96	33·75	42·75	13·5
November " ...	12·50	27	30 75	40	14·6
December " ...	13·50	27	30·25	40·5	17
January 1880 ...	13·50	30	27	46	16·88
February " ...	12·96	22 5	33·75	37·12	16·88
March " ...	20·75	22·5	27	37·12	20·20

1880-81.

April 1880 ...	11·58	18·35	33·52	15·52	22·27	23·96
May " ...	20·85	23·65	122·2	...	14 17	29·90
June " ...	18·6	18·80	82·2	...	...	24·8
July " ...	20·52	21·90	96·0	...	18·75	22·35
August " ...	19·15	20·00	82·2	...	22·6	23·4
September " ...	19·16	21·60	95·6	32·6	34·8	23·45
October " ...	11·96	15·46	50·0	26·56	32·45	21·12
November " ...	20·85	22·174	79·45	45·15	44·95	29·6
December " ...	12·47	18·124	50	26·0	37·92	17·45
January 1881 ...	16·78	24·0	48·6	24·10	37·67	28·50
February " ...	13·30	18·84	44·2	38·85	38·85	22·92
March " ...	39·20	23·21	76·4	54	47·4	40

1882-83.

Monthly average Prices-current.

1	2	3	4	5	6	7	8
Month.	Wheat.	Common rice.	Millets.	Indian-corn.	Gram.	*Máhuá.*	Remarks.
April 1882 ...	20·5	20·68	38·56	38 56	27	61·84	
May ,, ...	20·16	20	36·87	36·87	25·62	67·63	
June ,, ...	19·75	18·85	...	31·25	24·08	69·37	
July ,, ...	18·2	20·81	33·	33	19·64	67·76	
August ,, ...	16 59	17·97	40	40	20 15	65·83	
September ,, ...	22·53	20·77	...	47·66	25·70	73·33	
October ,, ...	19	19·05	37·16	54·93	21·25	68·08	
November ,, ...	33	32	...	50	28	34·	
December ,, ...	31	41·4	..	41	33	82·	
January 1883 ...	30·8	35 6	56 06	57 08	34·05	84·04	
February ,, ...	35 4	38·55	42	51·4	35·7	81·65	
March ,, ...	32·5	32·5	58	52·33	35·75	81·25	
Total ...	299·43	318 18	341·65	534 08	329 94	836·78	
Annual average ...	24·95	26 51	42·70	44·5	27·49	69·73	

1883-84.

April 1883 ...	22·75	31 97	56·9	53·4	34·85	45·18	
May ,, ..	21·5	19 39	46	45·5	28·56	47·7	
June ,, ...	23·85	20·13	...	44	29·75	41	
July ,, ...	20·49	18·23	38·5	40·52	30 01	67·62	
August ,, ...	18·83	19·75	37·25	41·25	24·9	80·15	
September ,, ...	20 95	18·5	45 8	42·7	30 32	74·7	
October ,, ...	19·9	16·4	40·5	34·35	23·85	49·10	
November ,, ...	19 93	16·3	27·93	27·75	25·45	63·5	
December ,, ...	20 6	14 38	31·96	27·10	25·58	52·6	
January 1884 ...	17·29	14·39	28·62	19 42	18·47	46·65	
February ,, ...	16·18	14·22	27	17·29	17 5	42·5	
March ,, ...	13·19	14·72	23·5	17·24	17	40·	
Total ...	..	...	...	...	...	...	
Annual average ...	19·62	18 19	32·83	34 21	25·52	54·22	

1884-85.

April 1884 ...	18	14·44	40	20·25	16·44	18·44	
May ,, ...	18·22	14 72	52·5	20 12	18·75	17 82	
June ,, ...	16·12	13·95	48·5	20	16 33	15·82	
July ,, ...	14 95	19·01(?)	34 95	20·6	20·15	14·81	
August ,, ...	14·45	11·38	31·37	20 5	19 5	13·87	
September ,, ...	13 87	11·97	27·76	16	22	14 2	
October ,, ...	14·35	13 99	28·87	24·75	26·25	17·69	
November ,, ...	14·7	15 72	29·76	26·95	26·49	15·76	
December ,, ...	16 62	16·4	29·18	25·86	27·71	16·5	
January 1885 ...	18·04	18 17	26·55	14·43	27·46	16·79	
February ,, ...	17·96	16·17	27·17	29·86	29 03	15·39	
March ,, ...	18	16·59	29 66	27 31	22·41	19 33	
Total ...	...	...	...	...	...	...	
Annual average ...	16 27	15·21	33·85	22 21	22·71	16 36	

1885-86.

April 1885 ...	10 5	15·31	25	21·31	19·24	31 89	
May ,, ...	18·1	14·52	25	19·29	18·71	29·25	
June ,, ...	17 43	14·27	24·5	19·26	18·16	31·84	
July ,, ...	17·69	14 81	25	18·37	17 04	30·4	
August ,, ...	16 65	14 92	24	19·64	16·84	29·7	
September ,, ...	16·33	15·73	30·51	30·28	16·59	28·16	
October ,, ...	16·61	18·96	36·91	37·20	15·87	29·31	
November ,, ...	18 26	21·93	35·45	34·89	17·46	30·27	
December ,, ...	18·74	22·04	33·8	35 37	18·74	28 98	
January 1886 ...	20·18	21·18	33·59	26·37	17 86	32.	
February ,, ...	20 34	20·87	30·7	35 7	18·69	...	
March ,, ...	21 19	19·21	35·75	29 86	23·83	...	
Annual average ...	18 33	17·81	30 07	27·29	18 24	30·18	

1886-87.

1	2	3	4	5	6	7	8
MONTH.	Wheat.	Common rice.	Millets.	Indian-corn.	Gram.	Mahuá.	REMARKS.
April 1886 ...	25·53	18 35	35	24·58	26·18	...	
May „ ...	27·47	17·87	35	32·43	27·37	...	
June „ ...	25·82	17·44	...	34·87	27·72	...	
July „ ...	24 75	13·14	30	35·11	27·78	...	
August „ ...	23·33	15·89	30	33·6	27·04	...	
September „ ...	23·91	17·28	38·2	37·43	27·12	...	
October „ ...	22·87	25·68	51	59·86	29·16	...	
November „ ...	25·93	23·36	32	46·43	29·63	...	
December „ ...	25·36	23·79	36·7	41·06	29·48	40·25	
January 1887 ...	26·17	23·8	41·25	45·48	28·14	80·5	
February „ ...	23·13	22·96	45	45·52	28·64	80	
March „ ...	21·65	20·1	48	36·05	25·3	...	
Annual average ...	24·66	19·99	38·38	39·37	27 79	66 91	

1887-88.

April 1887 ...	27·63	20 66	30	41·37	34·65	27·53	
May „ ...	23·17	19·2	...	40 52	33·35	53·5	
June „ ...	25·92	21·16	...	38·56	35 47	60·85	
July „ ...	23·66	19 92	...	38·57	33·55	64·62	
August „ ...	24·51	20 05	31	35·55	32·84	62·04	
September „ ...	22·27	20·74	48	43·43	30·89	65 58	
October „ ...	23·71	19·94	45	39·04	28·37	66·38	
November „ ...	21·64	18·96	40	32·72	27·02	64 16	
December „ ...	18 93	18·88	35	30 9	23 79	54	
January 1888 ..	15 87	17·75	...	25 81	21·95	45·81	
February „ ...	15·69	18·2	20	23·28	21·2	45·54	
March „ ...	17·88	18 65	...	28	20·62	53·9	
Annual average ...	21·74	19 47	20·7 (?) 35·6	34·74	28·57	55·22	

1888-89.

April 1888 ...	22·57	17·87	33·5	31·41	31·13	54 33	
May „ ...	21·45	17·84	53·5	33 5	28·83	40·	
June „ ...	22·13	17·27	35	21·82	24 7	50·31	
July „ ...	19 18	16·4	25	25·96	21·15	49·7	
August „ ...	17·68	16·94	30	25·65	20·34	54·12	
September „ ...	17·33	15·76	31	26·31	19 31	47·04	
October „ ...	18·18	16·33	30·25	23·8	18·7	44·68	
November „ ...	17·56	14 93	24·75	23·23	17·27	35·91	
December „ ...	15·78	16·07	25·	21·75	17·89	26·5	
January 1889 ...	16·91	15·53	19	16·7	16·83	28 4	
February „ ...	15·92	14·89	...	18·26	15·74	28·94	
March „ ...	16·27	15 46	9(?)	18·78	16·22	14·13	
Annual average ...	19·09	16·6	...	25·93	22·14	44·51	

(2) *Wages.*

The cash wages prevalent in the subdivision are stated below :—

Unskilled labour—

Man	...	8 to 10 Gorakpuri pice per diem.	
Woman	...	6 ditto	ditto.
Boy or girl	...	5 ditto	ditto.

Skilled labour—

Carpenter	...	4 annas ditto	ditto.
Blacksmith	...	4 „ ditto	ditto.
Mason	...	5 „ ditto	ditto.

The value of the Gorakpuri pice is very variable. A rupee is exchanged for 18 to 24 *gandás* (*i.e.*, 72 to 96) of Gorakpuri pice, on the average for 20 *gandás*. Thus 5 Gorakpuri pice would be equivalent to 4 current pice.

I have already said in section 10, chapter II that agricultural labourers are seldom paid in cash, but in grain. The rates of grain wages have been given in the section referred to.

APPENDIX VIII.

The table of weights prevalent in Palámau is the following:—

3 tolas	... = 1 chhaták	(= 1 oz. 13 drs.)
4 chhatáks	... = 1 poa	(= 4 oz. 12 „).
4 poas	... = 1 seer	(= 1 lb. 2 oz. 13 drs.)
6 seers	... = 1 paseri	
8 paseris	... = 1 maund	(= 59 lbs.)

The *káchcha* table of weight is used for all purposes in Palámau The *pákká* or standard weights are seldom used.

The standard of land measure in Palámau is the local bighá, which is theoretically equal to 32,400 square feet, and is therefore equivalent to three-fourths of an English acre, or 2¼ standard bighás. In many places, however, I found the local bighá to be 100 cubits square, which is equal to $1\frac{9}{16}$ standard bighás.

APPENDIX IX.

The following statement shows the number of schools of all classes, and of pupils attending them, in the Palámau subdivision for the year 1887-88:—

Description of Schools.	Number of schools.	Number of pupils.
High English (Government)	1	103
Middle „ (aided)	...	...
„ vernacular (Government)	1	41
„ „ (aided)	1	94
Upper primary (aided)	7	330
Lower „ „	70	2,368
„ „ (private)	14	385
Training school (Government)	1	14
Elementary schools teaching a vernacular only ...	5	48
Maktábs	3	19
Total ...	103	3,402

It is to the primary schools that we should chiefly look to for the education of the ráyats' children. There were in 1887-88 altogether 91 primary schools in the sub-division. These, distributed among 2,859 villages, gave 1 school to 31 villages. The male population of the sub-division was returned in 1881 as 240,285. If 15 per cent. of this male population, or 36,042 persons, be assumed as the number of boys of school-going age, we should have one boy going to school out of 10·6 boys eligible for school. In the Sudder sub-division the proportion was 1 : 7·5; hence it is apparent that education has made more progress in Chutiá Nágpur Proper than in Palámau.

The occupations and incomes of guardians of pupils were returned in 1885-86 as follows:—

Return showing the number of schools of all classes and of pupils, distinguished according to guardians' incomes and occupations, for the year 1885-86 (*Palámau subdivision*).

Class of Schools.	Number of schools.	Number of pupils.	Of guardians having upwards of Rs. 5,000 a year.	Of guardians having from Rs. 200 to Rs. 500 a year (not agriculturist).	Poorer classes of society having incomes less than Rs. 200 a year.					
					Agriculture.	Service.	Trades.	Skilled labour.	Common labour, &c.	Total.
High English	1	101	3	71	10	9	...	2	6	27
Middle vernacular	2	192	4	94	32	1	37	4	20	94
Upper primary	6	322	8	120	90	5	61	21	11	194
Lower „	68	2,910	15	533	1,655	73	204	274	156	2,362
Training schools	1	15	...	9	3	...	1	1	1	6
Tols	2	10	...	5	...	5	...	...	...	5
Maktábs	15	129	3	90	11	16	8	...	1	36
Elementary schools, &c. ...	9	79	...	38	34	1	1	...	5	41
Total ...	124	3,758	33	960	1,841	110	312	302	200	2,765

It would thus appear that out of 3,758 pupils, 1,841, or roughly 50 per cent., were sons of pure cultivators. It is also believed that the guardians of the 924 pupils shown under service, trades, skilled and common labour, were more or less intimately connected with agriculture.

W. J. & others—Reg. No. 4669J—50—30-1-92.

INDEX TO PART II.

(PALAMAU SUB-DIVISION.)

PAGE.

A.

Aboriginal tribes . . . . . 6—7
Abwábs, varieties of . . . . 70—71
Advances, or *dádní* 10
Áhír, a village cowherd . . . 43
Ahrás, or embanked reservoirs . 22—23
Akaín, a pitch-fork 21
Area of Palámau 1
Arts, *see* Manufactures . . . . 56—57
Ashes, as manure 1
Aspects, physical 1
Auranngá, a river 4

B.

Baigá, a village priest 13
Banghy, a carrying rod 11
Barai, a pulse, cultivation of . . 33
Barley, cultivation of . . . . 32—33
Basela, an axe 21
Bátwárá, assessment 48
Begari, or forced labour 71
Bhádoli assessment 48
Bonihar, a labourer 15
Buffaloes, treatment of 43

C.

Castes, agricultural . . . . 5—7
character of 7
Cattle 45
Chárá, a form of loan 10
Character as agriculturists of castes 7
Cheros, an aboriginal tribe . . . 7
Chine, a millet, cultivation of . . 33
Climate . . . . . 15—17
Clothing . . . . . 9—10
Coal-measures, description of . . 2—4
Cocoon-rearing, an industry . . 56—57
Commerce, *see* Trade . . . . 56—57
Communications . . . . . 51—52
Conveyances 11
Cotton, cultivation of . . . . 35—37
Cowdung, as manure 19
Crops grown, names of 24
grouped into harvests . . 24—25
rotation of 25
importance of 8

D.

Dáhá cultivation . . . . . 35—37
Dairy produce 44
Day-labourers . . . . . 14—15
Diseases of cattle 64
Dohar, or lowland 17
Dwellings 7

PAGE.

E.

Education of the agricultural population 75
Embankments 22
Emigration 12
Epidemics of cattle 44
Exports . . . . . 53—55

F.

Fairs . . . . . 55—56
Famine . . . . . 57—66
Fiscal divisions 67
Fish, trade in 56
Fodder, supply of 42
Food, character and supply of . 7—9
Fuel, supply of 42

G.

Geology of Palámau . . . . 2—4
Ghee, preparation of 44
Gingelly, or *til*, cultivation of . 35
Gorá, or upland paddy, cultivation of 28
Gorait, a village servant . . . 13
Government villages, settlement of . 49—50
Gram, cultivation of 34
Gur-making . . . . . 39—40

H.

Hánsuá, a sickle 21
Hár, a plough 20
Harrow 21
Hengá, a combined harrow and leveller 21
Hill-streams, for irrigation . . 23
Hill-systems 4
Hindu castes . . . . . 5—6

I.

Illegal cesses . . . . . 70—71
Immigration 12
Implements, agricultural . . 20—21
Imports . . . . . 53—55
Indebtedness of ráyats . . . . 10—11
Industries, *see* Manufactures . . 56—57
Insect-pests: of wheat 31
of gram 34
Irrigation . . . . . 22—24

J.

Jágírs, maintenance and service . 45—47
Jungle products, edible 8

PAGE.

K.

Kámiá, a serf . . . . . 14—15
Karjá, a loan 10
Khepi, a form of loan . . . 10
Kherwárs, an aboriginal tribe . . 7
Khesári, a pulse, cultivation of . 34—35
Kotwár, a village servant . . 13
Kurrur, an earth-removing appliance 21
Kurthi, a pulse, cultivation of . 34

L.

Land tenures: of Palámau . . 45—50
of Belaunjeh . . 50
of Japlá . . . 51
Lentils, cultivation of . . . 34
Linseed, cultivation of . . . 35
Live-stock . . . . . 43—45
Loans, forms of 10
Lohár, or village blacksmith . . 13

M.

Mahomedans in Palámau . . 6
Máhuá, a food 8
Maintenance *jágíre* . . . 45
Maintenance of a family, cost of . 9
Maize, cultivation of . . . 28
Mánjhihas, landlord's own cultivation 49
Manufactures . . . . . 56—57
Manures 19
Markets . . . . . 55—56
Máruá, a millet, cultivation of . 28
Meáns, a conveyance . . . 11
Measures 75
Menjhree, a millet, cultivation of . 29—30
Meteorological stations . . . 15
Minerals . . . . . 2—4
Mud, as manure 19

N.

Nagdi assessment 1

P.

Palámau, fiscal history of . . 45—47
Phárná, a spade 21
Plough 20
Poppy, cultivation of . . . 41—42
Population, divisions of . . . 5
Prices, statistics of . . . 72—74
Páriáddári, a tenure . . . 48—50

R.

Rahar, a pulse, cultivation of 34
Rainfall: character of . . . 16—17
statistics of . . . 67
Rates of rent 69

PAGE.

R.

Rent-suits, statistics of . . . 71
Rice, cultivation of . . . 25—27
Rights of ráyats in Government villages . . . . . 49—50
River systems 4
Rotation of crops 25

S.

Sáwán, a millet, cultivation of . 29
Seri, a form of loan . . . 10
Service tenures 50
Sheep, treatment of . . . 44—45
Sheep's dung, as manure . . 19
Soils, classes of . . . . 17—18
Statistics: of population . . 67—68
of cultivation . . 69
of rainfall . . . 69
of rates of rent . . 69
of *ábwábs* . . . 70—71
of rent-suits . . . 71
of tenures . . . 71
of education . . . 75
of wages . . . 74
of prices . . . 72—74
of exports and imports . 53—54
Sugarcane, cultivation of . . 37—41

E.

Tángi, an axe 22
Tánr, or high jungle land . . 18
Táriá, a drilling plough . . . 20
Tasar cocoons, rearing of . . 56—57
Topography of Palámau . . . 1
Trade and commerce . . . 53—56
statistics of . . . 53—54

U.

Uráons, an aboriginal tribe . . 6
Urid, a pulse, cultivation of . . 33
Utakar, a tenure 48

V.

Village officials . . . . . 12—14

W.

Wages, statistics of . . . 74
Weights, current 75
Wells for irrigation . . . 23
Wheat, cultivation of . . . 30—32
Wind directions 15

Z

Záripeshgi, a form of and mortgage 10